January 26, 2022

Proposal for the Development of City-owned real property
at the northwest corner of 18th Avenue South & 18th Street South
St. Petersburg, Florida, 33712

A. Description of Development

The development will consist of eleven two story high townhome style units. All homes will include three-bedroom, two and a half bathrooms and will be sold to households earning below 120% of the Area Median Income. Home loans will be provided by the developer to the new homeowners.

The total area of the individual home is approximately 1,306sf, living area approximately 1,280sf. A total of 15 parking bays will be provided. The foundations and floor slabs will be poured in place reinforced concrete. The external walls will be constructed of Structural Insulated Panels (SIPS) or masonry with 2-hour fire rated masonry walls between units, the roof design calls for metal roof sheeting.

The standard of finish and specification will be consistent with our previous comparable developments

B. Drawings & Elevations

Architectural renderings and a Schematic Site Plan are attached for your reference.
We have also attached constriction drawings of our Sixteenth Square Townhome development that are similar to the proposed development.

C. Sales Pricing & Affordability Assistance from the City

The proposal is aimed at promoting homeownership for the residence of South St. Petersburg and will be affordable for households with 3 or more members earning between 80% and 120% of the AMI. The table below shows that households earning incomes at the very bottom of this rang and, in some cases, slightly below 80% threshold can still afford to purchase one of these homes.

	Purchase Price	$ 215,000								
	AMI %	MAX AMI	Monthly Income	30% of MAX Household Income	RE Tax	Insurance	HOA	Mortgage actual Payment	Balance Available for Mortgage	Difference
Household Size 5 people	75%	$ 59,850	$ 4,988	$ 1,496	$ 257	$ 100	$ 100	$ 1,026	$ 1,039	$ 13
	80%	$ 63,840	$ 5,320	$ 1,596	$ 257	$ 100	$ 100	$ 1,026	$ 1,139	$ 113
	90%	$ 71,820	$ 5,985	$ 1,796	$ 257	$ 100	$ 100	$ 1,026	$ 1,339	$ 313
	100%	$ 79,800	$ 6,650	$ 1,995	$ 257	$ 100	$ 100	$ 1,026	$ 1,538	$ 512
	120%	$ 95,760	$ 7,980	$ 2,394	$ 257	$ 100	$ 100	$ 1,026	$ 1,937	$ 911
Household Size 4 people	75%	$ 55,344	$ 4,612	$ 1,384	$ 257	$ 100	$ 100	$ 1,026	$ 927	$ (99)
	80%	$ 59,033	$ 4,919	$ 1,476	$ 257	$ 100	$ 100	$ 1,026	$ 1,019	$ (7)
	90%	$ 66,413	$ 5,534	$ 1,660	$ 257	$ 100	$ 100	$ 1,026	$ 1,203	$ 177
	100%	$ 73,792	$ 6,149	$ 1,845	$ 257	$ 100	$ 100	$ 1,026	$ 1,388	$ 362
	120%	$ 88,550	$ 7,379	$ 2,214	$ 257	$ 100	$ 100	$ 1,026	$ 1,757	$ 731
Household Size 3 people	75%	$ 49,875	$ 4,156	$ 1,247	$ 257	$ 100	$ 100	$ 1,026	$ 790	$ (236)
	80%	$ 53,200	$ 4,433	$ 1,330	$ 257	$ 100	$ 100	$ 1,026	$ 873	$ (153)
	90%	$ 59,850	$ 4,988	$ 1,496	$ 257	$ 100	$ 100	$ 1,026	$ 1,039	$ 13
	100%	$ 66,500	$ 5,542	$ 1,663	$ 257	$ 100	$ 100	$ 1,026	$ 1,206	$ 180
	120%	$ 79,800	$ 6,650	$ 1,995	$ 257	$ 100	$ 100	$ 1,026	$ 1,538	$ 512

We propose to achieve increased affordability by providing seller financing to the purchasers of homes in this development and thus avoid many of the other addon expenses such as mortgage insurance, appraisal fees, mortgage originator fees and the like that specifically new homeowners are often saddled with. This solution will also allow us the flexibility to provide mortgages to qualified purchasers that may been excluded by the rigid lending criteria required by the corporate home mortgage industry.

Based on the above, and our understanding that the City wishes to provide affordable quality home ownership to families earning below the Area Midian Income we believe that the price point of $215,000 will achieve this goal, and provide a catalyst to stimulate further development in this neighborhood.

This sale price is below the amount required to develop the project and thus some level of assistance will be required from the City and other government agencies to provide homes at this level of affordability. The project proforma is outlined below.

D. Management and Maintenance of Affordability

Homes will be sold to homeowners who earn under 120% of the AMI. The properties will be deed restricted to ensure that resales are restricted to buyers who have income under 120% of the AMI. Affordability restrictions will be maintained for a period of 15 years.

E. Homeowner's Association

The properties will be deed restricted, with respect to the establishment of a Homeowner's Association that will be responsible for external maintenance and landscaping. We expect that the monthly cost to each homeowner to be approximately $100 per month plus $50 per month for cable & Internet.

F. Project Schedule

A summary of the development schedule is provided below. We expect to commence construction in January 2023 with the first closings for home sales starting in December 2023. We anticipate that the project will be complete by July 2024.There are numerous opportunities to expedite the development program and we look forward to working with the City to achieve early completion.

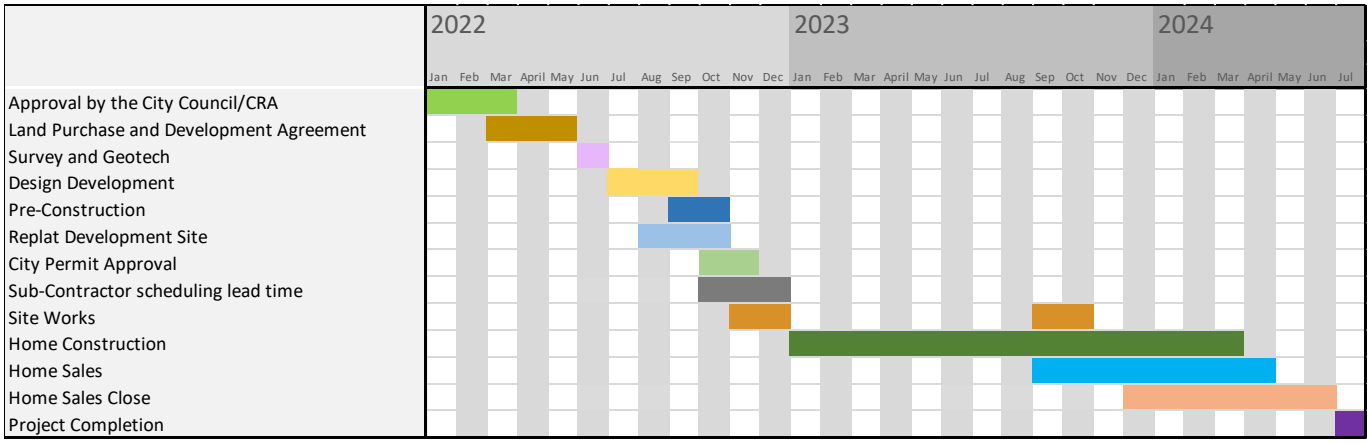

G. Project Proforma and Construction Budget

A summary of the project proforma/construction budget is presented as follows:

Description	Project Cost	Per Unit Cos	Pes SF
Land Cost	$ -	$ -	$ -
Site Works	$ 239,445	$ 21,768	$ 17
Construction	$ 2,106,994	$ 191,545	$ 148
Soft Costs	$ 281,440	$ 25,585	$ 20
Contractor's fee Namaste Construction	$ 275,000	$ 25,000	$ 19
Provision for Cost Escalation	$ 50,000	$ 4,545	$ 4
Contingency	$ 110,000	$ 10,000	$ 8
Development Overhead Namaste Homes	$ 110,000	$ 10,000	$ 8
Interest During Construction	$ 70,000	$ 6,364	$ 5
Total Cost Development	$ 3,242,879	$ 294,807	$ 228
Seller Closing Cost	$ 47,300	$ 4,300	$ 3
Commission on Sales	$ 141,900	$ 12,900	$ 10
Total Project Cost of Sales	$ 3,432,079	$ 312,007	$ 241
Home Sale Price	$ 2,365,000	$ 215,000	$ 166
Workforce Housing Subsidy	$ 110,000	$ 10,000	$ 8
City/CRA Grant required	$ 957,079	$ 87,007	$ 67
Breakeven Project Revenue	$ 3,432,079	$ 312,007	$ 241

The detailed project budget contains propriety information and has been submitted to City staff for their confidential review. We are open to working with the city to reduce the development and construction costs and work with the City to use any combination of sale price and financial assistance that is deemed appropriate, the basis of this calculation being placing Namasté Homes in a breakeven position between cost and revenue.

The above is based on actual current construction and development costs on our comparative projects currently under construction and assumes that the City will donate the land at no cost to the developer as part of the development agreement

H. Energy Efficiency

Homes will be constructed with the following conservation and energy efficient elements:

- Insulated Impact Windows
- Thermal Insulation
- Energy Efficient Air-conditioning
- Energy Efficient Appliances
- Natural Gas Appliances if available

I. Source of Funds

We will be completing the project as a joint venture with Ardent OZF, LLC a qualified Opportunity Zone Fund.

J. Affirmative Agreement to Ensure that City's Objectives are Achieved

Namasté Homes LLC is committed to working with the City to ultimately enter into a development agreement with them that will satisfy the City's objectives.

K. Complete Description of the Proposers Entity

Namasté Homes LLC will establish a single purpose entity, as a subsidiary of Namasté Homes LLC and Ardent OZF, LLC for the purpose of owning and developing the project. Namasté Homes is a Limited Liability Company, all shares in the company are owned by the Principal, Frederic Samson, Ardent OZF, LLC is a qualified Opportunity Zone Fund.

L. Purchase Agreement

We are prepared to enter into a purchase/development agreement with the City and CRA with terms similar to that previously agreed for our Sixteenth Square Development.

M. Resume of Proposers Previous Experience

Namasté has significant experience in the development of similar homes in the St. Petersburg area, here are just a few of our successfully projects:

- Artistry at Park Station Pinellas Park FL
  28 freestanding Homes – Under Construction
- Sixteenth Square Townhomes South St. Petersburg
  11 Unit Workforce Housing Development – Under Construction.
- 1341 Gooden Crossing, Largo, FL
- 4160 14th Street North St. Petersburg, FL
- 3121 Prescott Street North St. Petersburg, FL
- 3127 Prescott Street North St. Petersburg, FL

- 2714 46th Terrace North St. Petersburg, FL
- 2304 51st Street South, Gulfport, Fl
- 15535 Gifford Lane Spring Hill, FL

N. Previous projects with the City of St. Petersburg

Sixteenth Square Townhomes

Namasté Homes has entered into a development agreement with the City of St. Petersburg to construct 11 income restricted Townhomes at 1523 Dr.ML King Jr Street South. Construction has commenced and we expect to complete the project by the end of 2022.

O. Previous CRA projects

Artistry at Park Station

Namasté Homes is currently developing 28 freestanding homes in partnership with the City of Pinellas Park and plans are in progress to develop an additional mixed-use development of including 4 condominium units and 2,500 sf retail/commercial space.

P. Description of the Development team

Namasté Homes has the required capacity with respect to staffing and administrative systems to complete the project.

Namasté Development Team

Frederic Samson – President - St. Petersburg, Pinellas

Frederic Samson is a licensed residential contractor and a real estate broker. He has been a full time Real Estate Professional in the Tampa Bay Area for 23+ years. He has managed upward of 100 Sales Associates and sold hundreds of homes. Frederic has an extensive experience in organizing and scheduling processes. His office currently manages 200 properties. For the past 10 years he added the remodeling and construction operations to offer more services.

- 2000 – present: Own and operate real estate offices in St. Pete and New Port Richey
- 2007 – present: Own and operate Namasté Homes, LLC
- 2011 – present: Own and operate Namasté Construction & Namasté Realty
- 2016 – present: Own and operate Davis-Clarke Real Estate

Frederic has managed multiple job sites over the years that were remodeling projects and new single-family construction. Frederic was President of the West Pasco Board of Realtors in 2011 and President of the Tampa Bay District for the Florida Realtors. Frederic has been involved with West Pasco Habitat for Humanity and has help raised over $100,000 for its mission.

Glenn Larkan – Development Manager - St. Petersburg, Pinellas

Glenn Larkan, the Development Manager, graduated from the University of Natal with a Bachelor of Science degree in construction/real estate. He is a licensed Florida real estate sales associate. Glenn has extensive experience with a wide variety of real estate transactions and development projects, most of his experience was gained while working for industry leading, listed, multi-national corporations in the construction, banking and institutional investment sectors. Projects completed include well over 1,000 free standing homes, several luxury condominium apartment projects, regional shopping centers, office buildings and industrial properties.

Jennifer Lumsden – Licensed Real Estate Agent, Sales & Marketing - St. Petersburg, Pinellas

Cathy DeMartino – Purchasing Agent – Pinellas Park, Pinellas

Alice Coleman – Accounting – Zephyrhills, Pasco

Dave Behringer – Site Manager - Redington Shores, Pinellas

David Behringer was a General Contractor in New York State for over 30 years. He has completed projects of all sizes in his career and joined Namasté Construction in 2017 to become the field manager. His experience brings quality control to all the daily work to the job sites. Making sure all the work is completed correctly and efficiently. In addition, he manages the majority of the site material needed and scheduling with the sub-contractors.

Q. Professional Consultants, Subcontractors and Suppliers

- Klar & Klar Architects
  - Architect
  - 28473 US Hwy 19 N suite 602, Clearwater, FL
- Fletcher & Fischer P.L.
  - Attorney
  - 433 Central Ave 4th Floor, St. Petersburg, FL
- McCarthy and Associates
  - Structural Engineer
  - 2555 Nursery Rd # 101, Clearwater, FL
- Pennoni
  - Civil Engineer
  - 5755 Rio Vista Drive Clearwater, FL 33760
- Pennoni
  - Land Surveying
  - 5755 Rio Vista Drive Clearwater, FL 33760
- Central Florida Testing
  - Geotech Consultant
  - 12625 40th St N, Clearwater, FL 33762

- Tampa Bay Builds
    - Concrete and Masonry
    - 816 East Genesee Street Tampa, FL 33603
- Gramatica SIPS Intl
    - SIP Supplier
    - 5519 E Chelsea St, Tampa, FL 33610
- Meares Plumbing
    - Plumbing
    - 14525 Shady Hills Rd, Spring Hill, FL 34610
- Allied Electrical Systems
    - Electrical Contractor
    - 745 40th St S, Saint Petersburg, FL 33711
- Healthy Air Services
    - Airconditioning
    - 6719 12th St N Saint Petersburg, FL 33702

R. Use of Minority or Small Business Enterprises

- With respect to the promotion of Small Business Enterprises (SBE) Namasté Homes, our professional consultants, and sub-contractors, with one exception, are all local businesses that qualify for inclusion under the City's SBE program.
- We will continue to prioritize the award of any Subcontract to licensed, minority owned businesses located within the CRA.

S. Current Litigation and Administrative Action

We confirm that Namasté Homes LLC is not party to or will be affected by any litigation, administrative action, investigation or other government or quasi-governmental proceedings which would or could have an adverse effect upon the Property or upon our ability to fulfill our obligations under any agreement relating to this proposal, and there are no lawsuits, administrative actions, governmental investigations or similar proceedings pending or, to our actual knowledge, threatened against or affecting our interests herein.

T. Primary Contact

Frederic Samson
Namasté Homes LLC
3020 49th Street North, St. Petersburg, FL 33710
Phone: 727 547 3610
Fax:727 399 6878
Email: fsamson@mynnw.net

Annexures:

1. **Architectural Rendering**
2. **Schematic Site Plan**
3. **Schematic Floor Plans**
4. **Internal Prospective Drawings**
5. **Sixteenth Square Construction Drawings**

SCHEMATIC BUILDING RENDERING

EIGHTEEN EIGHTEEN

NOTE:
RENDERINGS DEPICT SCHEMATIC DESIGN ONLY. FINAL MATERIALS AND LOOK MAY VARY SLIGHTLY PENDING FINAL DEVELOPER APPROVAL.

NAMASTÉ HOMES
"BUILDING A NEW WORLD"

klar and klar architects inc.
www.klarklar.com
COPYRIGHT 2020

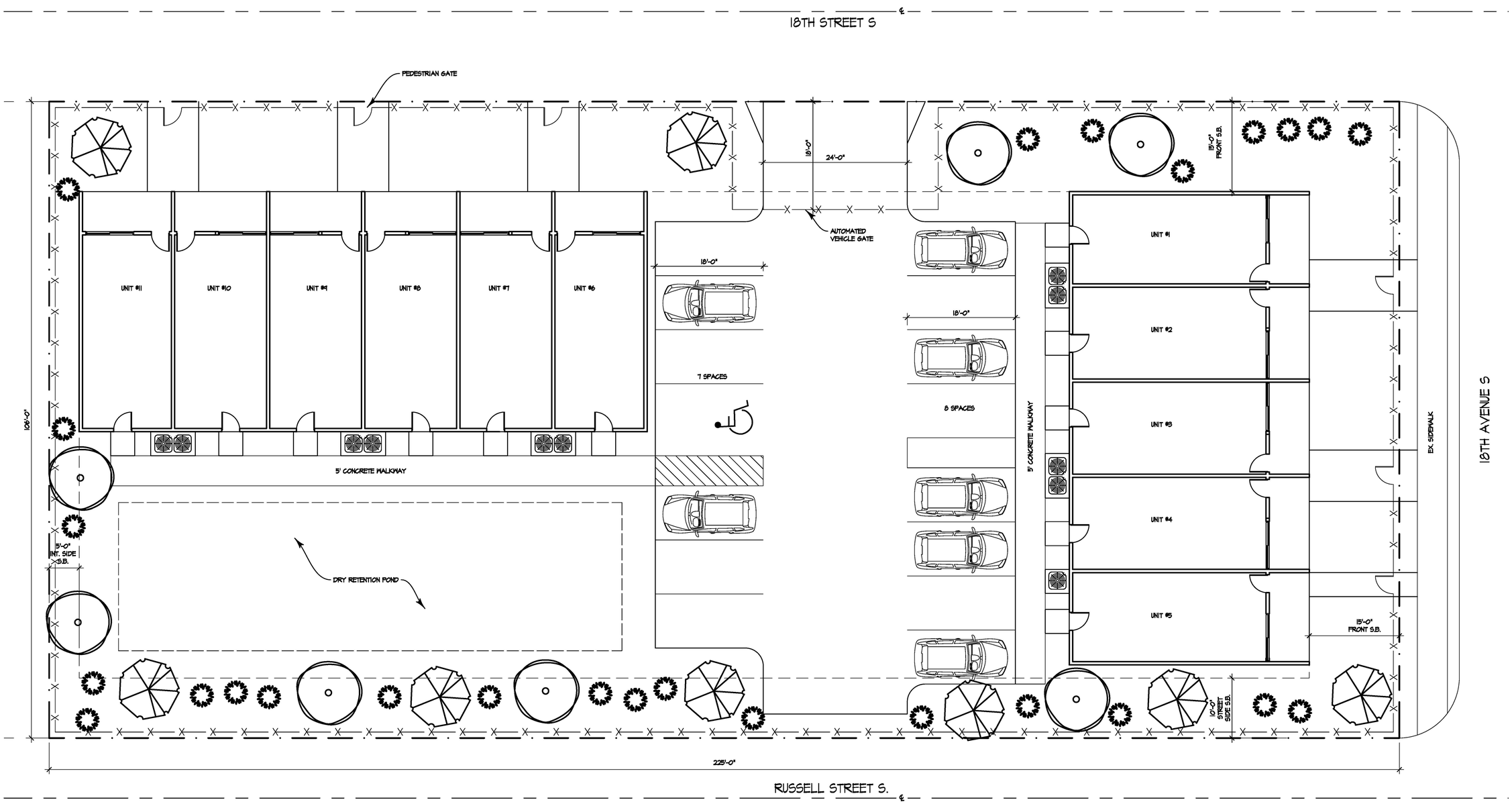

NAMASTÉ HOMES
"BUILDING A NEW WORLD"

NORTH

1 SP1 SCHEMATIC SITE PLAN
1/8" = 1'-0"

△	revision	by
△		
△		
△		
△		
△		
△		

NAMASTE 1818
18TH AVE. S
ST. PETERSBURG, FL 33712

klar and klar
architects + interior designers

www.klarklar.com

28473 us 19 n
suite 602
clearwater, fl 33761
727-799-5420

American Institute of Architects member firm

☐ Roberta S. Klar
☒ Steven L. Klar

AA 0002321

☒ Preliminary
☐ Permitting Set
☐ Construction Set

Date: 1/18/21

Drawn: SK/EP

Sheet: SP1

Of:

Copyright 2022. All rights reserved—no part of this document may be reproduced in any form without permission of Klar and Klar Architects, Inc.

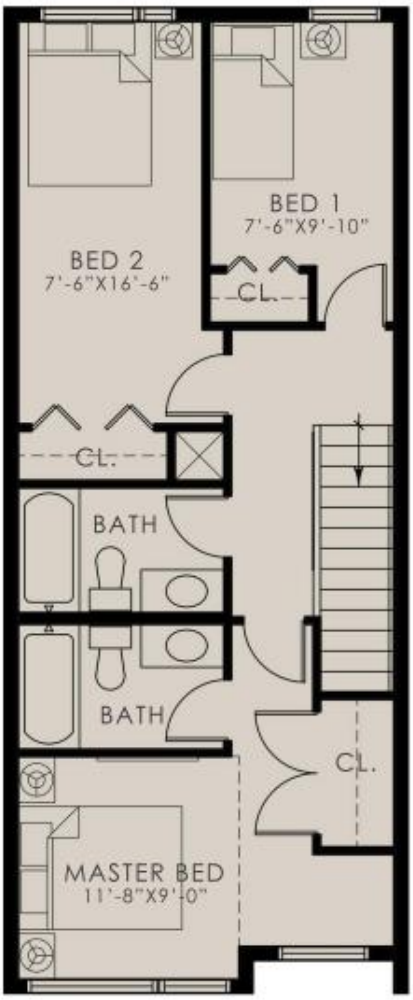

SCHEMATIC FLOOR PLAN
LEVEL 2

SCHEMATIC FLOOR PLAN
LEVEL 1

klar and klar
architects inc.
www.klarklar.com
COPYRIGHT 2020

klar and klar
architects inc.
www.klarklar.com
COPYRIGHT 2020

klar and klar
architects inc.
www.klarklar.com
COPYRIGHT 2020

sixteenth SQUARE - bldg. 1

COPYRIGHT 2020

TABLE OF CONTENTS

T.O.C.	- TITLE SHEET
SP1	- ARCHITECTURAL SITE PLAN
A0.0	- GENERAL NOTES / DATA / PRODUCT APPROVALS
A0.1A	- WINDOW SCHEDULE & DETAILS
A0.1B	- DOOR SCHEDULE & DETAILS
A0.2A	- PAINT SPECIFICATION
A0.2B	- ARCHITECTURAL NOTES / WALL TYPES
A0.3A	- STRUCTURAL NOTES
A0.3B	- STRUCTURAL NOTES / WIND LOAD DESIGN CRITERIA
A1.0	- BUILDING 1 - TYP. FIRST FLOOR PLAN
A1.1	- BUILDING 1 - TYP. SECOND FLOOR PLAN
A2.0	- BUILDING ELEVATIONS
A2.1	- BUILDING SECTIONS
A2.2	- STAIR SECTION / TYP. WALL SECTIONS
A3.0	- BUILDING 1 - FOUNDATION PLAN
A3.1	- FOUNDATION DETAILS
A3.2	- FOUNDATION DETAILS
A4.0	- BUILDING 1 - FLOOR FRAMING PLAN
A4.1	- BUILDING 1 - ROOF FRAMING PLAN
A5.0	- DETAILS
A5.1	- DETAILS
A6.0	- INTERIOR ELEVATIONS
E1.0	- TYP. FIRST & SECOND FLOOR ELECTRICAL PLANS
M-1	- TYP. FIRST FLOOR MECHANICAL PLAN
M-2	- TYP. SECOND FLOOR MECHANICAL PLAN
P-1	- TYP. FIRST FLOOR MECHANICAL PLAN
P-2	- TYP. SECOND FLOOR MECHANICAL PLAN
C1	- GENERAL NOTES & SPECIFICATIONS
C2	- EXISTING CONDITIONS / DEMOLITION PLAN
C3	- SITE PLAN
C4	- GRADING & DRAINAGE PLAN
C5	- CIVIL DETAILS
C6	- CIVIL DETAILS
C7	- UTILITY PLAN
C8	- UTILITY DETAILS

- 35 SHEETS TOTAL

klar and klar
architects + interior designers

12/15/20

28473 US 19 N. SUITE 602
CLEARWATER, FL 33761

PRINCIPAL ARCHITECT
STEVE KLAR

PROJECT ARCHITECT & CONTACT
EMILY PANO

E-MAIL
EMILY@KLARKLAR.COM

WEBSITE
WWW.KLARKLAR.COM

PHONE
727-799-5420

PARKING:
(11) 3 BED UNITS * 1.5 = 16.5 PARKING SPACES
16.5 * 10% WORKFORCE HOUSING REDUCTION = 1.65 SPACES
16.5 * 10% TRANSIT ROUTE REDUCTION = 1.65 SPACES
16.5 - 1.65 - 1.65 = 13.2 SPACES REQUIRED
14 SPACES SHOWN

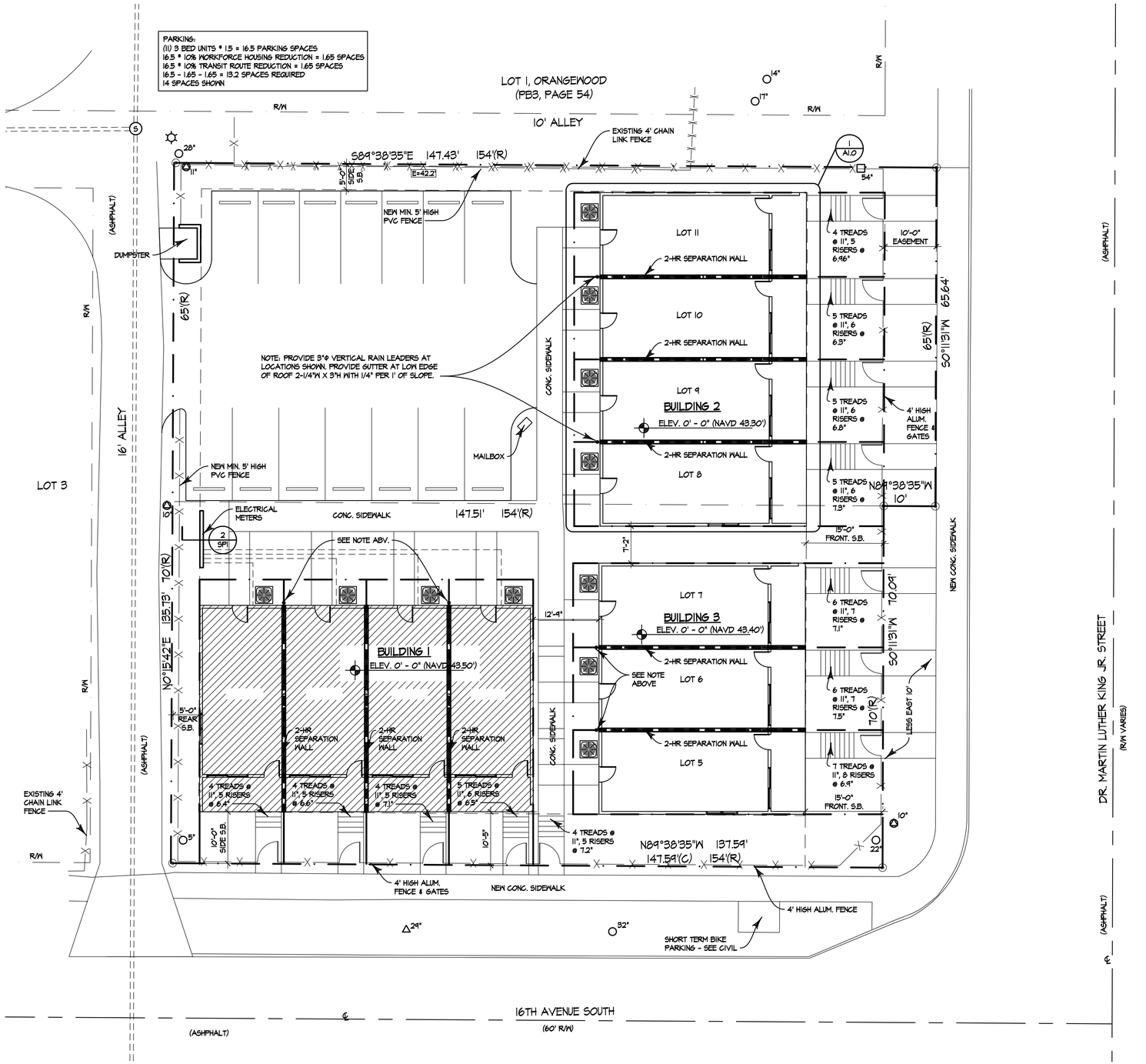

1 / SP1 ARCHITECTURAL SITE PLAN
3/32" = 1'-0"

NOTE:
PROVIDE 3"Φ VERTICAL RAIN LEADERS AT LOCATIONS SHOWN. PROVIDE GUTTER AT LOW EDGE OF ROOF 2-1/4"W X 3"H WITH 1/4" PER 1' OF SLOPE.

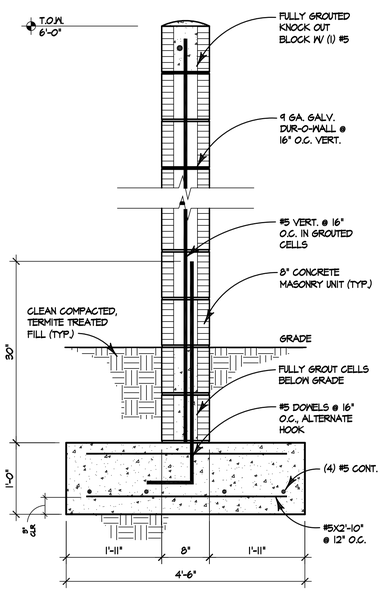

2 / SP1 ELECT. METER / DUMPSTER ENCLOSURE TYP. WALL SECT.
1" = 1'-0"

Copyright 2020. All rights reserved-no part of this document may be reproduced in any form without permission of klar and klar Architects, inc.

△	revision	by
△		
△		
△		
△		
△		
△		

SIXTEENTH SQUARE - BUILDING 1
1523 DR. MARTIN LUTHER KING JR. ST. S. ST. PETERSBURG, FL 33705

klar and klar
architects + interior designers
www.klarklar.com
28473 us 19 n
suite 602
clearwater, fl 33761
727-799-5420
American Institute of Architects member firm
☐ Roberta S. Klar
☒ Steven L. Klar
AA 0002321

☐ Preliminary
☒ Permitting Set
☒ Construction Set

Date: 12/15/20
Drawn: SK/EP
Sheet: SP1
Of:

RESIDENTIAL PROJECT DATA

PROJECT DATA:

OWNER: NAMASTE HOMES
CONTACT: GLENN LARKIN
OWNER PHONE: (646) 694-4421
ADDRESS: 1523 DR. MARTIN LUTHER KING JR. ST. S., ST. PETERSBURG, FL 33705

BUILDING DATA:

FBC OCCUPANCY CLASSIFICATION RESIDENTIAL

APPLICABLE CODES:

FLORIDA BUILDING CODE RESIDENTIAL 6TH EDITION

UNIT 101, 104	
FIRST FLOOR	
LIVING (AC)	550 SF
FRONT PATIO	103 SF
TOTAL	653 SF
SECOND FLOOR	
LIVING (AC)	653 SF
TOTAL LIVING (AC)	1,203 SF
TOTAL UNIT	1,306 SF

UNIT 102, 103	
FIRST FLOOR	
LIVING (AC)	538 SF
FRONT PATIO	102 SF
TOTAL	640 SF
SECOND FLOOR	
LIVING (AC)	640 SF
TOTAL LIVING (AC)	1,178 SF
TOTAL UNIT	1,280 SF

BUILDING 1 GSF	
UNTI 1-1	1,306 SF
UNIT 1-2	1,280 SF
UNIT 1-3	1,280 SF
UNIT 1-4	1,306 SF
TOTAL	5,172 GSF

KEY TO SYMBOLS

NORTH ARROW — PROJECT NORTH

DRAWING TITLE — NUM / SHT — DRAWING TITLE, SCALE

SECTION CUT

ELEVATION — NUM / SHT

DETAIL — NUM / SHT

ELEVATION TARGET — LOCATION, ELEVATION

REVISION TAG — NUM

DOOR / KEYNOTE TAG — NUM

WINDOW TAG — NUM

WALL TYPE TAG — NUM

FLR./ CLG. FINISHES TAG — X

FOUNDATION TYPE TAG — TYPE

ROOM NUMBER TAG — X

2-HR. RATED WALL

MATERIAL/WALL LEGEND

EARTH, FILL	SECTION
CONCRETE	SECTION, PLAN
STEEL	SECTION
CONCRETE COLUMN	PLAN
SIPS WALL / ROOF PANEL	SECTION, PLAN
8" CMU. WALL — DENOTES FILLED CELL W/ 1-#5 VERT. BAR	PLAN
LOAD BEARING 2X4 STUD WALL @ 16" O.C. W/ 3/4" A.B. @ 32" O.C. MAX. & 5/8" G.W.B. E.S. & 3 1/2" (R-13) INSUL.	SECTION, PLAN
NON-LOAD BEARING 2X4 STUD WALL @ 16" O.C. (U.N.O.)	PLAN
WOOD SHIM	SECTION
ROUGH WOOD	SECTION
DECORATIVE TRIM (NON-STRUCTURAL)	SECTION
PLYWOOD	SECTION
GYPSUM	SECTION, PLAN
STUCCO	SECTION, PLAN
RIGID INSULATION	SECTION
BATT INSULATION	SECTION, PLAN

ABBREVIATIONS

AB	-ANCHOR BOLT
ABV	-ABOVE
AC	-AIR CONDITIONER
ACT	-ACOUSTICAL CEILING TILE
ADJ	-ADJACENT
AFF	-ABOVE FINISH FLOOR
AL	-ALUMINUM
BD	-BOARD
BLDG	-BUILDING
BLK	-BLOCK
BO	-BOTTOM OF
BP	-BASE PLATE
BRG	-BEARING
BRK	-Brick
CAB	-CABINET
CDR	-CEDAR
CF	-CEILING FINISH
CIP	-CAST-IN-PLACE CONCRETE
CJ	-CONTROL JOINT
CL	-CENTER LINE
CLG	-CEILING
CLR	-CLEAR
CMU	-CONCRETE MASONRY UNIT
COL	-COLUMN
CONC	-CONCRETE
CONT	-CONTINUOUS
CPT	-CARPET
CT	-COUNTERTOP
CW	-CURTAIN WALL
DBH	-DIAMETER AT BREAST HEIGHT
DIA	-DIAMETER
DR	-DOOR
DRAW	-DRAWER
DTL	-DETAIL
DWG	-DRAWING
ELEV	-ELEVATION
EJ	-EXPANSION JOINT
EP	-ELECTRICAL PLAN
EQ	-EQUAL
ES	-EACH SIDE
EST	-ESTIMATE
EW	-EACH WAY
EWC	-ELECTRIC WATER COOLER
EX	-EXISTING
EXY	-EPOXY PAINT
EXT	-EXTERIOR
FD	-FLOOR DRAIN
FF	-FLOOR FINISH
FLR	-FLOOR
FR	-FIRE RETARDANT
FS	-FAR SIDE
F.S.	-FIRE SPRINKLER
FTG	-FOOTING
GA	-GAUGE
GL	-GLASS
GWB	-GYPSUM WALL BOARD
HB	-HOSE BIBB
HDR	-HEADER
HT	-HEIGHT
HM	-HOLLOW METAL
HVAC	-HEATING/VENTILATING/AIR CONDITIONING
IC	-INSTALLED BY CONTRACTOR
IM	-ICE MAKER
INSUL	-INSULATION
INT	-INTERIOR
IO	-INSTALLED BY OWNER
JT	-JOINT
LLH	-LONG LENGTH HORIZONTAL
LLH	-LONG LENGTH VERTICAL
LOPT	-LIGHT ORANGE PEEL TEXTURE
LVR	-LOUVER
MTL	-METAL
MAX	-MAXIMUM
MC	-MEDICINE CABINET
MIN	-MINIMUM
M.M.	-MATERIALS MANUAL
MO	-MASONRY OPENING
MT	-METAL THRESHOLD
MTD	-MOUNTED
MW	-MICROWAVE
NIC	-NOT IN CONTRACT
NS	-NEAR SIDE
NTS	-NOT TO SCALE
O/	-OVER
OA	-OVERALL
ODK	-OUTDOOR KITCHEN
OC	-ON CENTER
OH	-OVERHANG
OPP	-OPPOSITE
P	-PAINT
PAV	-PAVERS
PBO	-PURCHASED BY OWNER
PF	-PRE-FINISHED/PRIMED
PL	-PLATE
PLA	-PLASTIC LAMINATE
POR	-POINT OF REFERENCE
PT	-PRESSURE TREATED
PTD	-PAINTED
QT	-QUARRY TILE
R	-RADIUS
RCP	-REFLECTED CEILING PLAN
RD	-ROOF DRAIN
REF	-REFRIGERATOR
RM	-ROOM
RO	-ROUGH OPENING
RUB	-RUBBER FLOORING
S	-STAIN
SC	-SOLID CORE
SDG	-SIDING
SF	-SURFACE FINISH
SGD	-SLIDING GLASS DOOR
SH	-SHELF; SHELVES
SIM.	-SIMILAR
SPEC	-SPECIFICATIONS
SS	-STAINLESS STEEL
ST	-STUCCO
STD	-STANDARD
STL	-STEEL
SV	-SHEET VINYL
T	-TILE
T&G	-TONGUE & GROOVE
TEMP	-TEMPERED
TG	-TEMPERED GLASS
TOB	-TOP OF BEARING
TOW	-TOP OF WALL
TR	-TRUSS
TYP	-TYPICAL
UNO	-UNLESS NOTED OTHERWISE
V	-VINYL BASE
VB	-VAPOR BARRIER
VT	-VINYL TILE
W/	-WITH
WB	-WALL BASE
WD	-WOOD
WH	-WATER HEATER
WIN	-WINDOW
W/O	-WITHOUT
WWM	-WELDED WIRE MESH

GENERAL NOTES

1. A GENERAL CONTRACTOR (G.C.) SHALL NOTE THAT THESE CONSTRUCTION DOCUMENTS ESTABLISH A MINIMUM MATERIAL OR CONSTRUCTION METHOD STANDARD. THE G.C. SHALL PROVIDE A 'BID' PRICE BASED ON THE SPECIFIC MATERIALS SHOWN AND NOTED IN THIS SET.
2. THERE SHALL BE NO DEVIATION BY THE G.C. FROM THE CONSTRUCTION DOCUMENTS UNLESS APPROVED IN WRITING BY THE ARCHITECT.
3. REGARDLESS OF G.C./ OWNER AGREEMENT, THIS PROJECT WILL BE CONSTRUCTED FOLLOWING STRICT PROTOCOL ESTABLISHED IN A.I.A. DOC A201-2007 ED.
4. PLAN DIMENSIONS ARE GIVEN TO FACE OF STUDS OR BLOCK WALLS. "CLEAR" DIMENSIONS ARE GIVEN TO THE FACE OF FINISHED MATERIALS.
5. LARGER DETAILS TAKE PRECEDENCE OVER SMALLER DETAILS.
6. "SIMILAR" MEANS COMPARABLE TO ANOTHER DETAIL WITH MINOR DEVIATION.
7. N.I.C. MEANS THAT IT WILL BE PURCHASED AND INSTALLED BY OWNER.
8. P.B.O. MEANS THAT IT WILL BE PURCHASED AND BROUGHT TO THE SITE BY OWNER AND INSTALLED BY G.C.
9. ELECTRONIC FILES AT THE DISCRETION OF THE ARCHITECT WILL BE PROVIDED THROUGH THE G.C. TO THE SUB-CONTRACTOR FOR USE IN DRAWING ANY SHOP DWGS.
10. THE G.C SHALL BE RESPONSIBLE FOR PROVING ANY/ALL SAFEGUARDS DURING CONSTRUCTION TO PROTECT BOTH JOBSITE PERSONNEL, AND IF NECESSARY THE ADJACENT GENERAL PUBLIC AND PROPERTY.

Copyright 2020. All rights reserved-no part of this document may be reproduced in any form without permission of klar and klar Architects, Inc.

FINISH NOTES

1. G.C TO INCLUDE IN CONTRACT, UN-FACED 3 1/2" MIN. R-11 INSULATION INSIDE ALL INTERIOR WALLS.
2. ALL G.W.B. TO BE FINISHED WITH LOPT (U.N.O.)
3. USE 1/2" TILE BACKER BEHIND ALL WALL TILE.
4. ALL BATHROOM WALLS & CEILINGS TO HAVE MOISTURE RESISTANT G.W.B.
5. THE SCHLUTER-KERDI MEMBRANE OVER TILE BACKER IS TO BE USED IN ALL SHOWER AND TUB LOCATIONS. USE SCHLUTER-KERDI-LINE SHOWER DRAIN IN MASTER SHOWER. (PROVIDE ALTERNATIVE PRICING USING MAPEI AQUA DEFENSE W/ REINFORCING FABRIC AT ALL CORNERS/WALL/FLOOR TRANSITION AND DRAIN IN REPLACEMENT OF KERDI WALL MEMBRANE SYSTEM. INSTALL PER MANUF. SPECIFICATIONS.)

PRODUCT APPROVAL

PRODUCT CATEGORY	SUB CATEGORY	MANUFACTURER / MODEL #	STATE OF FLORIDA APPROVAL NUMBER
ROOFING	UNDERLAYMENTS	GCP APPLIED TECHNOLOGIES / ICE & WATER SHIELD	FL 298.1
ROOFING	METAL ROOFING	GULF COAST SUPPLY / GULF LOK	FL 11651.2
PANEL WALLS	PANEL WALLS	GRAMATICA SIPS / 6" TITAN EXL	FL 18622.2
ROOFING	PANELS	GRAMATICA SIPS / ROOF PANELS	FL 18651.1
PANEL WALLS	SIDING	JAMES HARDIE / LAP SIDING	FL 13142.2
PANEL WALLS	SIDING	JAMES HARDIE / PANEL SIDING	FL 15223.2
PANEL WALLS	SOFFIT	PLYGEM / MASTIC UNIVERSAL VINYL	FL 23352.1
EXTERIOR DOORS	IN- SWING DOOR	THERMA-TRU / SMOOTHSTAR GLAZED	FL 7640.1
EXTERIOR DOORS	SLIDING DOOR	PGT / WINGUARD ALUM. SGD 770	FL 251.4
WINDOW	PICTURE	PGT / WINGUARD ALUM. PW 1270A	FL 243.9
WINDOW	FIXED CASEMENT	PGT / WINGUARD ALUM. CA 740	FL 243.2
WINDOW	CASEMENT	PGT / WINGUARD ALUM. CA 740	FL 245.2
WINDOW	MULLIONS	PGT ALUM. MULLIONS	FL 261.1

1. G.C. SHALL FURNISH TO THE JOBSITE FOR THE INSPECTOR, COPIES OF THE PRODUCT TESTING AND EVALUATION REPORTS (INCLUDING PRODUCT INSTALLATION REQUIREMENTS THAT MEET OR EXCEED THE CODE REQUIRED WIND RESISTANCE PERFORMANCE CRITERIA) FOR EACH MATERIAL USED IN THE PRODUCT APPROVAL CHART ABV.

SHOP DRAWINGS

1. NO CONSTRUCTION SHALL OCCUR WITHOUT SHOP DRAWING REVIEW BY ARCHITECT.
2. THE GENERAL CONTRACTOR SHALL ALLOW (10) CALENDAR DAYS FOR ARCHITECTS REVIEW.
3. CONTRACTOR SHALL NOT BE RELIEVED FROM RESPONSIBILITY FOR ERRORS OR OMISSIONS IN SHOP DRAWINGS.

SHOP DRAWINGS (3 COPIES MAX.) TO BE PROVIDED TO ARCHITECT FOR REVIEW AFTER THEY HAVE BEEN REVIEWED AND SIGNED/DATED BY THE G.C., AND SHALL BE LIMITED TO THE FOLLOWING ITEMS:

- SIGNED AND SEALED ENGINEERED ROOF AND FLOOR TRUSSES
- SIGNED AND SEALED ENGINEERED "SIPS" WALL & ROOF PANELS INCLUDING ALL CONNECTIONS AND CALCULATIONS
- ROOFING/ WATERPROOFING/ UNDERLAYMENT
- EXTERIOR WATERPROOFING / SEALANTS
- EXTERIOR / INTERIOR INSULATION
- WINDOWS, FRAMES, & HARDWARE
- DOORS, FRAMES, THRESHOLDS, & HARDWARE
- EXTERIOR CLADDING / SIDING
- EXTERIOR PAINT / COATINGS
- EMISC. STEEL / ALUMINUM

THE ABOVE REQUIRED SHOP DRAWINGS DO NOT RELIEVE THE G.C. FROM OTHER SHOP DRAWINGS IF REQUESTED IN THE CONSTRUCTION DOCUMENTS BY STRUCTURAL AND MECHANICAL ENGINEERS.

	revision	by
△		
△		
△		
△		
△		
△		
△		

S|XTEENTH SQUARE - BUILDING 1
1523 DR. MARTIN LUTHER KING JR. ST. S. ST. PETERSBURG, FL 33705

klar and klar
architects + interior designers
www.klarklar.com
28473 us 19 n
suite 602
clearwater, fl 33761
727-799-5420
American Institute of Architects member firm
☐ Roberta S. Klar
☒ Steven L. Klar
AA 0002321

☐ Preliminary
☒ Permitting Set
☒ Construction Set

Date: 12/15/20
Drawn: SK/EP
Sheet: A0.0
Of:

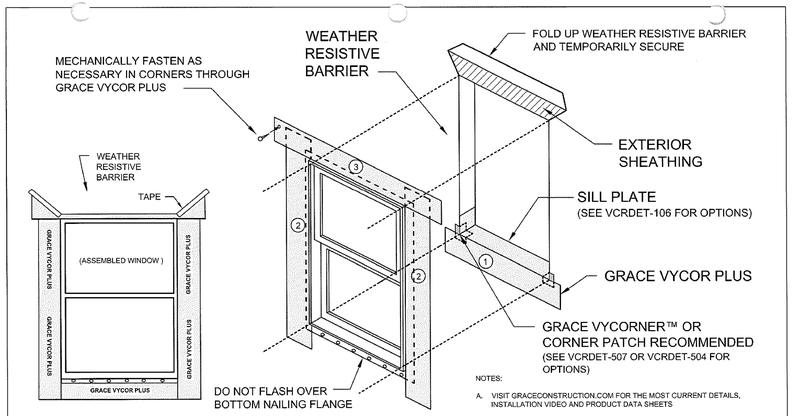

HEAD FLASHING TIE-IN INSTRUCTIONS:

1. CUT, FOLD UP AND TEMPORARILY SECURE WEATHER RESISTIVE BARRIER ABOVE HEADER TO ALLOW FOR FLASHING INSTALLATION
2. INSTALL GRACE VYCOR PLUS HEAD FLASHING UNDER WEATHER RESISTIVE BARRIER ALONG HEADER
3. FOLD WEATHER RESISTIVE BARRIER BACK OVER HEAD FLASHING AND SEAL WITH TAPE AS SHOWN ABOVE

NOTES:

A. VISIT GRACECONSTRUCTION.COM FOR THE MOST CURRENT DETAILS, INSTALLATION VIDEO AND PRODUCT DATA SHEETS
B. RIPCORD® CAN BE REMOVED FROM GRACE VYCOR PLUS FOR EASE OF INSTALLATION
C. REMOVE WEATHER RESISTIVE BARRIER FROM TOP OF WINDOW SILL PLATE
D. INSTALL GRACE VYCOR PLUS IN ORDER AS SHOWN BY NUMBERS
E. INSTALL GRACE VYCOR PLUS AND WEATHER RESISTIVE BARRIER TO FORM WATER-SHEDDING LAPS
F. DETAIL ALSO RELEVANT FOR GRACE VYCOR V40 AND VYCOR BUTYL

GRACE Construction Products
www.graceconstruction.com
toll free 866-333-3726

FLANGED WINDOW - OPTION 1
FLASHING INSTALLATION AFTER WEATHER RESISTIVE BARRIER
GRACE VYCOR® PLUS SELF-ADHERED FLASHING

Drawing:	VCRDET-100
Scale:	Not to scale
Effective Date:	01/31/07
Supersedes:	09/01/05

7 / A0.1A N.T.S.

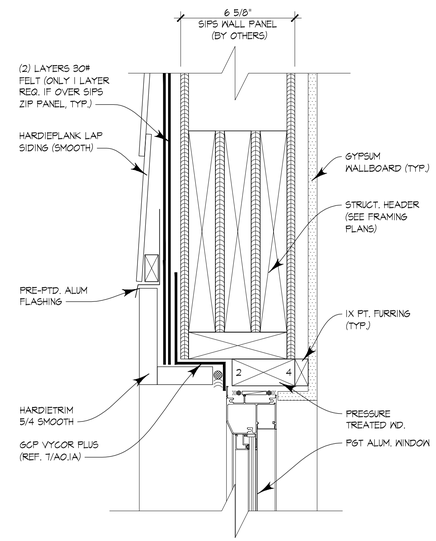

5 / A0.1A **ALUM. WINDOW HEAD DETAIL**
3"=1'-0"

NOTE:
1. REFER TO 1/A0.1A FOR ROUGH OPENING WATERPROOFING (TYP.)

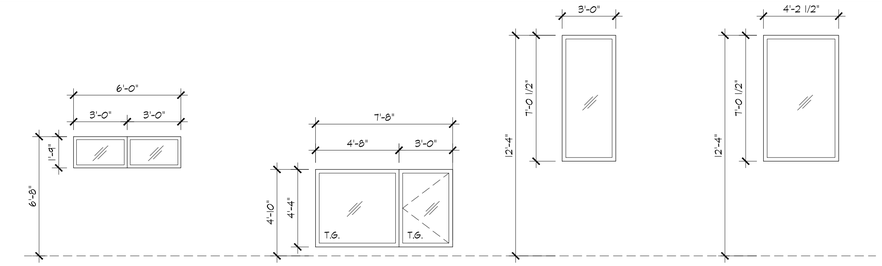

A PGT WINGUARD ALUM. PICTURE WINDOWS PW 7120A (UNIT 104 ONLY)

B PGT WINGUARD ALUM. EGRESS CASEMENT CA 740 W/ FIXED CASEMENT CA 740

C PGT WINGUARD ALUM. PICTURE PW 7120A

D PGT WINGUARD ALUM. PICTURE PW 7120A

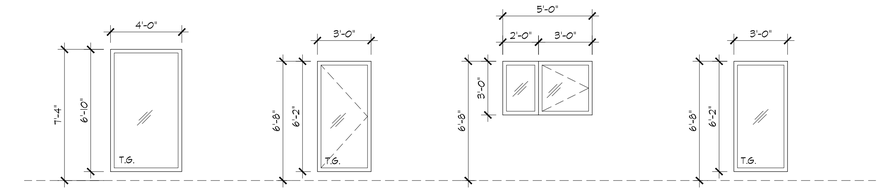

E PGT WINGUARD ALUM. PICTURE PW 7120A

F PGT WINGUARD ALUM. EGRESS CASEMENT CA 740

G PGT WINGUARD ALUM. EGRESS CASEMENT CA 740 W/ FIXED CASEMENT CA 740

H PGT WINGUARD ALUM. PICTURE PW 7120A (UNIT 101 ONLY)

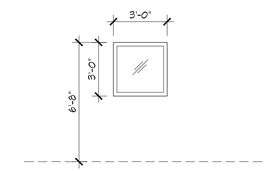

I PGT WINGUARD ALUM. PICTURE PW 7120A (UNIT 104 ONLY)

WINDOW & FRAME NOTES

1. GLAZING TINT ON ALL EXTERIOR GLASS TO BE GRAY WITH SHGC 0.25 OR LESS.
2. ALL EXTERIOR GLAZING IS TO BE INSULATED IMPACT RESISTANT.
3. ALL WINDOW FRAMES TO BE BRONZE.

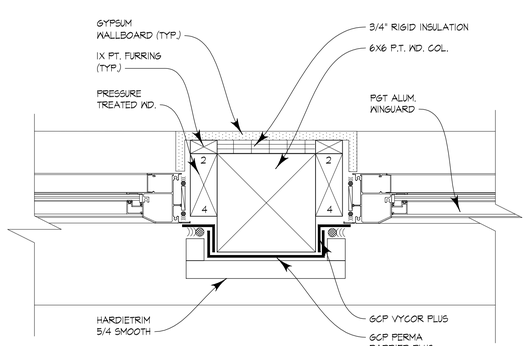

6 / A0.1A **ALUM. WINDOW DETAIL**
3"=1'-0"

NOTE:
1. G.C. TO COAT ENTIRE WD. COLUMN W/ MASTERSEAL ANB 900 FIRST.

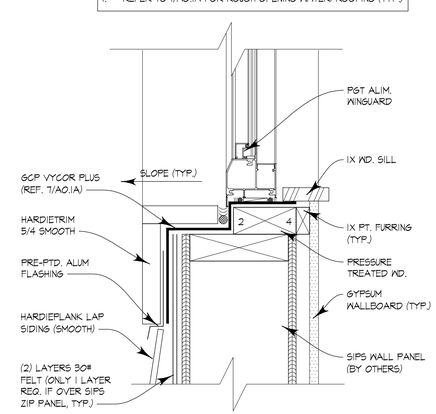

4 / A0.1A **ALUM. WINDOW SILL DETAIL**
3"=1'-0"

NOTE:
1. REFER TO 1/A0.1A FOR ROUGH OPENING WATERPROOFING (TYP.)

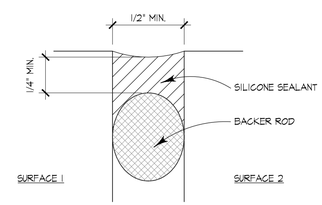

3 / A0.2B **BLDG. SEALANT JOINT**
1/4"=1'-0"

NOTE:
1. JOINT SURFACE TOOLED CONCAVE.
2. BACKER ROD TO BE COMPRESSED MIN. OF 25%.
3. PRIME SURFACES PER MANUFACTURER REQUIREMENTS.
4. ANY JOINTS NOT MEETING THESE MIN. DIMENSIONS, WILL BE REJECTED BY THE ARCHITECT. ALL REPLACEMENT WILL BE AT GENERAL CONTRACTOR EXPENSE.

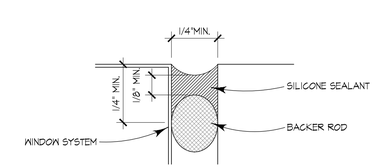

2 / A0.2B **TYP. WINDOW SYSTEM WEATHER SEAL DETAIL**
1/4"=1'-0"

NOTE:
1. JOINT SURFACE TOOLED CONCAVE.
2. BACKER ROD TO BE COMPRESSED MIN. OF 25%.
3. PRIME SURFACES PER MANUFACTURER REQUIREMENTS.
4. ANY JOINTS NOT MEETING THESE MIN. DIMENSIONS, WILL BE REJECTED BY THE ARCHITECT. ALL REPLACEMENT WILL BE AT GENERAL CONTRACTOR EXPENSE.

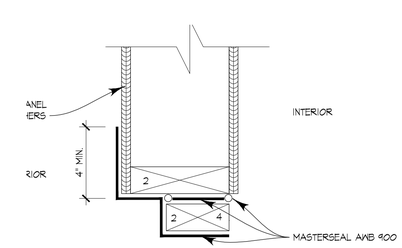

1 / A0.1A **R.O. WATERPROOFING DETAIL - FRAME**
3"=1'-0"

NOTE: INSTALL PER FMA/AAMA 100-12
INSTALL PER FMA/AAMA 300-12

Copyright 2020. All rights reserved-no part of this document may be reproduced in any form without permission of Klar and Klar Architects, Inc.

	revision	by
△		
△		
△		
△		
△		
△		

SIXTEENTH SQUARE - BUILDING 1
1523 DR. MARTIN LUTHER KING JR. ST. S. ST. PETERSBURG, FL 33705

klar and klar
architects + interior designers
www.klarklar.com
28473 us 19 n
suite 602
clearwater, fl 33761
727-799-5420
American Institute of Architects member firm
☐ Roberta S. Klar
☒ Steven L. Klar
AA 0002321

☐ Preliminary
☒ Permitting Set
☒ Construction Set

Date: 12/15/20
Drawn: SK/EP
Sheet: A0.1A
Of:

DOOR SCHEDULE

DOOR TAG	ELEV. TAG	MANUF.	MODEL	DOOR TYPE	DOOR SIZE	DOOR FINISH	REMARKS
01*	A	THERMA-TRU	SMOOTH STAR, PULSE LINEA	IN-SWING	3'-0"X6'-8"	PTD.	GLAZING TO BE IMPACT - CLEAR
02*	B	PGT	ALUM. WINGUARD SGD T70	SLIDING	(2) 4'-0"X6'-8"	BRONZE	GLAZING TO BE IMPACT - GRAY
03*	C	THERMA-TRU	SMOOTH STAR, FULL LITE	IN-SWING	3'-0"X6'-8"	PTD.	GLAZING TO BE IMPACT - CHORD
04	D	MASONITE	LINCOLN PARK	SWING	3'-0"X6'-8"	PTD.	LEVER HANDLE HARDWARE
05	E	MASONITE	LINCOLN PARK	BIFOLD	3'-0"X6'-8"	PTD.	
06	D	MASONITE	LINCOLN PARK	SWING	2'-6"X6'-8"	PTD.	
07	E	MASONITE	LINCOLN PARK	BIFOLD	3'-0"X6'-8"	PTD.	
08	D	MASONITE	LINCOLN PARK	SWING	2'-6"X6'-8"	PTD.	
09	F	MASONITE	LINCOLN PARK	BIFOLD	(2) 2'-6"X6'-8"	PTD.	
10	D	MASONITE	LINCOLN PARK	SWING	2'-6"X6'-8"	PTD.	
11	D	MASONITE	LINCOLN PARK	SWING	2'-6"X6'-8"	PTD.	
12	D	MASONITE	LINCOLN PARK	SWING	2'-6"X6'-8"	PTD.	
13	F	MASONITE	LINCOLN PARK	BIFOLD	(2) 2'-0"X6'-8"	PTD.	

DOOR AND FRAME NOTES:

1. INTERIOR DOOR FRAMES TO BE PAINTED.
2. ALUM. THRESHOLD REQ'D ON ALL EXTERIOR DOORS.
3. ALL THRESHOLDS TO BE SET ON A CONTINUOUS BED OF (DOW 790) SILICONE SEALANT.
4. * INDICATES EXTERIOR DOOR. SEE A0.0 FOR PRODUCT APPROVAL NUMBER.
5. ALL GLAZING IN "HAZARDOUS LOCATIONS" SHALL BE TEMPERED PER 6TH EDITION FBC-R (2017), SECTION R308.4.

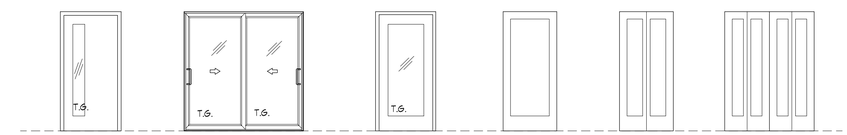

A	B	C	D	E	F
THERMA-TRU SMOOTH STAR PULSE LINEA	PGT WINGUARD ALUM. SGD	THERMA-TRU SMOOTH STAR FULL LITE	MASONITE LINCOLN PARK	MASONITE LINCOLN PARK	MASONITE LINCOLN PARK

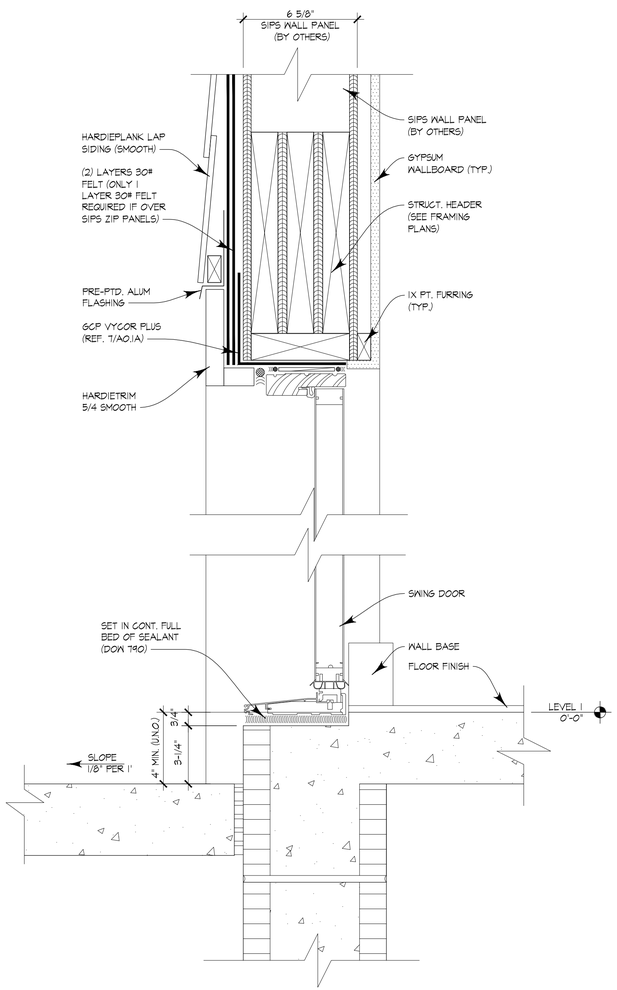

4 / A0.1B TYP. DOOR DETAIL

3"=1'-0"

NOTE:
1. REFER TO 1/A0.1A FOR ROUGH OPENING WATERPROOFING (TYP.)

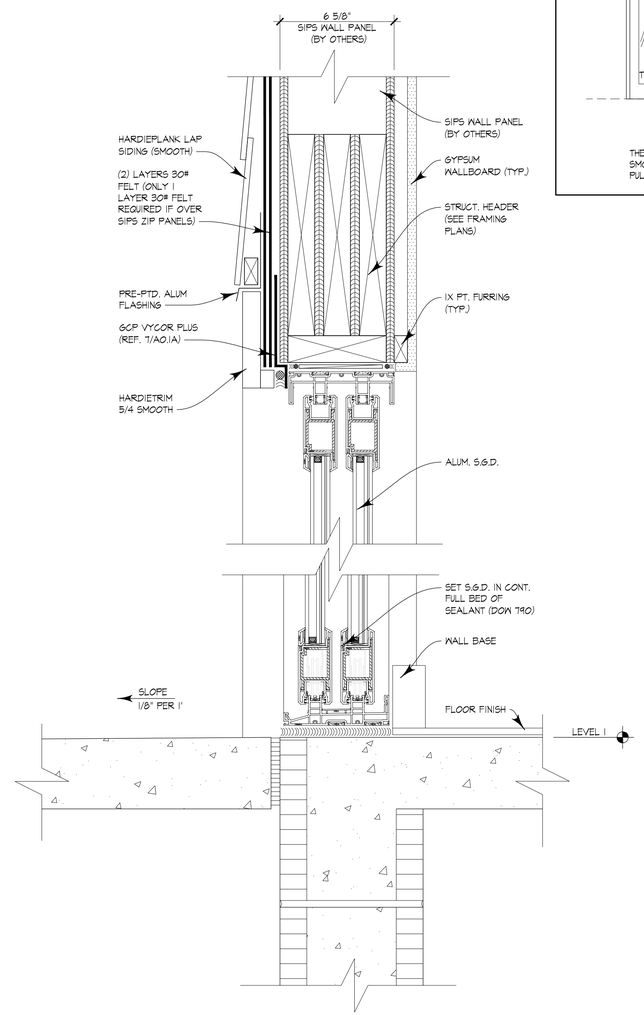

3 / A0.1B S.G.D. TYP. SILL (2 PANEL)

3"=1'-0"

NOTE:
1. REFER TO 1/A0.1A FOR ROUGH OPENING WATERPROOFING (TYP.)

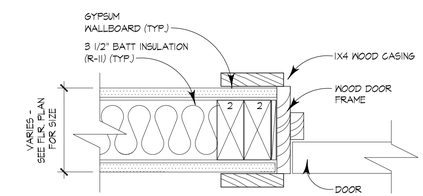

2 / A0.1B INT. DOOR JAMB

3"=1'-0"

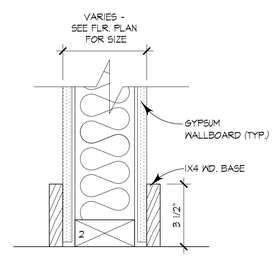

1 / A0.1B INT. BASE DETAIL

3"=1'-0"

△	revision	by
△		
△		
△		
△		
△		
△		

SIXTEENTH SQUARE - BUILDING 1
1523 DR. MARTIN LUTHER KING JR. ST. S. ST. PETERSBURG, FL 33705

klar and klar
architects + interior designers
www.klarklar.com
28473 us 19 n
suite 602
clearwater, fl 33761
727-799-5420
American Institute of Architects member firm
☐ Roberta S. Klar
☒ Steven L. Klar
AA 0002321

☐ Preliminary
☒ Permitting Set
☒ Construction Set

Date: 12/15/20

Drawn: SK/EP

Sheet: A0.1B

Of:

Copyright 2020. All rights reserved-no part of this document may be reproduced in any form without permission of Klar and Klar Architects, Inc.

INTERIOR COATING SPECIFICATIONS

BENJAMIN MOORE PAINT SPECIFICATIONS

SURFACE	PRIMER # COATS	PRIMER PRODUCT	FINISH # COATS	FINISH PRODUCT
GYPSUM WALL BOARD: EGGSHELL	1	ULTRA SPEC 500 WATERBORNE INTERIOR PRIMER SEALER N534	2	ULTRA SPEC 500 WATERBORNE EGGSHELL N538
GYPSUM WALL BOARD: SEMI-GLOSS	1	ULTRA SPEC 500 WATERBORNE INTERIOR PRIMER SEALER N534	2	ULTRA SPEC 500 WATERBORNE SEMI-GLOSS N539
GYPSUM WALL BOARD: GLOSS	1	ULTRA SPEC 500 WATERBORNE INTERIOR PRIMER SEALER N534	2	ULTRA SPEC WATERBORNE GLOSS N540
WOOD TRIM: PAINTED SEMI-GLOSS	1	FRESH START 100% ACRYLIC PRIMER 046	2	ULTRA SPEC 500 WATERBORNE INTERIOR GLOSS N539
WOOD TRIM:PAINTED GLOSS	1	SURE SEAL PRIMER SEALER 027	2	ADVANCCE MODIFIED ALKYD 794
WOOD TRIM: CLEAR VARNISH	N/A	N/A	2	BENWOOD STAYS CLEAR ACRYLIC POLYURETHANE HIGH GLOSS 422
CONCRETE BLOCK: SEMI-GLOSS	1	ULTRA SPEED HIGH BUILD BLOCK FILLER 571	2	ULTRA SPEC WATERBORNE SEMI-GLOSS N539
CONCRETE BLOCK: GLOSS	1	MOORE SUPER CRAFT LATEX BLOCK FILLER 285	2	ULTRA SPEC 500 WATERBORNE INTERIOR GLOSS N540
GALVANIZED STEEL/METAL:SEMI-GLOSS	1	ULTRA SPEC HP04 ACRYLIC METAL PRIMER	2	ULTRA SPEC HP DTM SEMI-GLOSS HP29
GALVANIZED STEEL/METAL: GLOSS	1	ULTRA SPEC HP04 ACRYLIC METAL PRIMER	2	ULTRA SPEC HP DTM GLOSS HP28
OVERHEAD EXPOSED CONSTRUCTION (DECK, JOISTS, STEEL)	1	ULTRA SPEC HP04 ACRYLIC METAL PRIMER	2	CORONADO DRYFALL N110/N112

SHERWIN WILLIAMS PAINT SPECIFICATIONS

SURFACE	PRIMER # COATS	PRIMER PRODUCT	FINISH # COATS	FINISH PRODUCT
GYPSUM WALL BOARD: EGGSHELL	1	PROMAR 200 ZERO VOC INTERIOR LATEX PRIMER B28W2600	2	PROMAR 200 ZERO VOC INTERIOR LATEX EGGSHELL B20W2651
GYPSUM WALL BOARD: SEMI-GLOSS	1	PROMAR 200 ZERO VOC INTERIOR LATEX PRIMER B28W02600	2	PROMAR 200 ZERO VOC INTERIOR LATEX SEMI-GLOSS B31W02651
GYPSUM WALL BOARD: GLOSS	1	PROMAR 200 ZERO VOC INTERIOR LATEX PRIMER B28W02600	2	PRO INDUSTRIAL HIGH PERFORMANCE ACRYLIC GLOSS B66W00611
WOOD TRIM: PAINTED SEMI-GLOSS	1	PREMIUM WALL AND WOOD PRIMER, INTERIOR LATEX B28W08111	2	PROCLASSIC WATERBORNE INTERIOR ACRYLIC SEMI-GLOSS ENAMEL B31W01151
WOOD TRIM:PAINTED GLOSS	1	PREMIUM INTERIOR LATEX WALL & WOOD PRIMER B28W08111	2	PROCLASSIC WATERBORNE INTERIOR ACRYLIC GLOSS B21W00051
WOOD TRIM: CLEAR VARNISH	1	WOOD CLASSICS WATERBORNE POLYURETHANE VARNISH CLEAR A68F00410	1	WOOD CLASSICS WATERBORNE POLYURETHANE VARNISH CLEAR A68F00410
CONCRETE BLOCK: SEMI-GLOSS	1	PREPRITE INTERIOR/EXTERIOR LATEX BLOCK FILLER B25W00025	2	PROMAR 200 ZERO VOC INTERIOR LATEX SEMI-GLOSS B31W02651
CONCRETE BLOCK: GLOSS	1	PREPRITE INTERIOR/EXTERIOR LATEX BLOCK FILLER B25W00025	2	PRO INDUSTRIAL HIGH PERFORMANCE ACRYLIC-GLOSS B66W00611
GALVANIZED STEEL/METAL:SEMI-GLOSS	1	PRO INDUSTRIAL PRO-CRYL UNIVERSAL ACRYLIC PRIMER B66W00310	2	PRO INDUSTRIAL HIGH PERFORMANCE ACRYLIC SEMI-GLOSS B66W00651
GALVANIZED STEEL/METAL: GLOSS	1	PRO INDUSTRIAL PRO-CRYL UNIVERSAL ACRYLIC PRIMER B66W00310	2	PRO INDUSTRIAL HIGH PERFORMANCE ACRYLIC GLOSS B66W00611
OVERHEAD EXPOSED CONSTRUCTION (DECK, JOISTS, STEEL)	1	PRO INDUSTRIAL WATERBORNE ACRYLIC DRYFALL FLAT B42W00081	1	PRO INDUSTRIAL WATERBORNE ACRYLIC DRYFALL FLAT B42W00081

PPG PAINT SPECIFICATIONS

SURFACE	PRIMER # COATS	PRIMER PRODUCT	FINISH # COATS	FINISH PRODUCT
GYPSUM WALL BOARD: EGGSHELL	1	PPG SPEEDHIDE INTERIOR LATEX QUICK DRYING PRIMER/SEALER 6-2	2	SPEEDHIDE INTERIOR EGGSHELL LATEX 6-411 SERIES
GYPSUM WALL BOARD: SEMI-GLOSS	1	PPG SPEEDHIDE INTERIOR LATEX QUICK DRYING PRIMER/SEALER 6-2	2	PPG SPEEDHIDE INTERIOR SEMI-GLOSS 6-510 SERIES
GYPSUM WALL BOARD: GLOSS	1	PPG SPEEDHIDE INTERIOR LATEX QUICK DRYING PRIMER/SEALER 6-2	2	SPEEDHIDE GLOSS LATEX ENAMEL 6-8534 SERIES
WOOD TRIM: PAINTED SEMI-GLOSS	1	SEAL GRIP ACRYLIC ENAMEL UNDERCOATER 17-455	2	SPEEDHIDE INTERIOR SEMI-GLOSS LATEX ENAMEL 6-510 SERIES
WOOD TRIM:PAINTED GLOSS	1	SEAL GRIP ACRYLIC ENAMEL UNDERCOATER 17-455	2	SPEEDHIDE GLOSS LATEX ENAMEL 6-8534 SERIES
WOOD TRIM: CLEAR VARNISH	1	NOT USED	2	DEFT POLYURETHANE INTERIOR WB ACRYLIC DFT109
CONCRETE BLOCK: SEMI-GLOSS	1	SPEEDHIDE INTERIOR/EXTERIOR MASONRY BLOCK FILLER LATEX 6-7	2	PPG SPEEDHIDE INTERIOR SEMI-GLOSS LATEX ENAMEL 6-510 SERIES
CONCRETE BLOCK: GLOSS		SPEEDHIDE INTERIOR/EXTERIOR MASONRY BLOCK FILLER LATEX 6-7	2	SPEEDHIDE INTERIOR/EXTERIOR 100% ACRYLIC GLOSS 6-8534
GALVANIZED STEEL/METAL:SEMI-GLOSS	1	PITT-TECH ONE PACK INDUSTRIAL PRIMER 90-708 SERIES	2	PITT TECH PLUS DTM SEMI-GLOSS ENAMEL 4216 HP SERIES
GALVANIZED STEEL/METAL: GLOSS	1	PITT-TECH ONE PACK INDUSTRIAL PRIMER 90-708 SERIES	2	SPEEDHIDE GLOSS LATEX ENAMEL 6-8354 SERIES
OVERHEAD EXPOSED CONSTRUCTION (DECK, JOISTS, STEEL)	1	FLAT DRY FALLOUT COATING SYSTEM 100% ACRYLIC FLASH RUSH RESISTANT DRYFALL	2	WB SUPER TECH FLAT DRYFALL 6-723XI, 6-725XI SERIES

EXT. COATING SPECIFICATIONS

SURFACE	PRIMER # COATS	PRIMER PRODUCT	FINISH # COATS	FINISH PRODUCT
GALVANIZED STEEL/METAL:SEMI-GLOSS	1	ULTRA SPEC HP04 ACRYLIC METAL PRIMER	2	ULTRA SPEC HP DTM HP29
GALVANIZED STEEL/METAL: GLOSS	1	ULTRA SPEC HP04 ACRYLIC METAL PRIMER	2	ULTRA SPEC HP DTM HP28
WOOD/TRIM/SIDING: SEMI-GLOSS	1	SURE SEAL INTERIOR/EXTERIOR 027	2	ULTRA SPEC EXTERIOR SOFT GLOSS N449
WOOD FASCIA: EGGSHELL	1	SUPERSPEC 164 LATEX EXTERIOR PRIMER	2	ULTRA SPEC EXTERIOR SATIN FINISH N448
CEMENT FIBER: EGGSHELL (JAMES HARDIE PRODUCTS)	1	ULTRA SPEC EXTERIOR PRIMER N558	2	ULTRA SPEC 500 EXTERIOR SATIN FINISH N448
CEMENT FIBER: SEMI-GLOSS (JAMES HARDIE PRODUCTS)	1	ULTRA SPEC EXTERIOR PRIMER N558	2	SUPERSPEC 170 SEMI-GLOSS
STUCCO: EGGSHELL	1	ACRYLIC MASONRY SEALER 0608	2	ULTRA SPEC EXTERIOR SATIN N448
STUCCO: SEMI-GLOSS	1	ACRYLIC MASONRY SEALER 0608	2	ULTRA SPEC EXTERIOR SOFT GLOSS N449
DIMENSION LUMBER SUBSTRATES: FOOT TRAFFIC SURFACES: LUMBER DECKING, STAIRS	1	STIX BONDING PRIMER	2	MOORES FLOOR & PATIO ENAMEL 122

SURFACE	PRIMER # COATS	PRIMER PRODUCT	FINISH # COATS	FINISH PRODUCT
GALVANIZED STEEL/METAL:SEMI-GLOSS	1	PRO INDUSTRIAL PRO-CRYL UNIVERSAL ACRYLIC PRIMER B66W00310	2	PRO INDUSTRIAL PRO-CRYL ACRYLIC SEMI-GLOSS B66W00651
GALVANIZED STEEL/METAL: GLOSS	1	PRO INDUSTRIAL PRO-CRYL UNIVERSAL ACRYLIC PRIMER B66W00310	2	PRO INDUSTRIAL HIGH PERFORMANCE ACRYLIC GLOSS B66W00611
WOOD/TRIM/SIDING: SEMI-GLOSS	1	EXTERIOR LATEX WOOD PRIMER B42W08041	2	SUPERPAINT EXTERIOR LATEX GLOSS A84W01151
WOOD FASCIA: EGGSHELL	1	WOODSCAPES EXTERIOR ACRYLIC STAIN A150005	1	WOODSCAPES EXTERIOR ACRYLIC STAIN A15W00051
CEMENT FIBER: EGGSHELL (JAMES HARDIE PRODUCTS)	1	LOXON CONCRETE & MASONRY PRIMER INTERIOR/EXTERIOR LATEX A24W08300	2	SUPERPAINT EXTERIOR LATEX FLAT SATIN & GLOSS A84W01151
CEMENT FIBER: SEMI-GLOSS (JAMES HARDIE PRODUCTS)	1	LOXON CONCRETE & MASONRY PRIMER INTERIOR/EXTERIOR LATEX A24W08300	2	SUPERPAINT EXTERIOR LATEX FLAT SATIN & GLOSS A84W01151
STUCCO: EGGSHELL	1	LOXON CONCRETE & MASONRY PRIMER INTERIOR/EXTERIOR LATEX A24W08300	2	SUPERPAINT EXTERIOR LATEX SATIN A84W01151
STUCCO: SEMI-GLOSS	1	LOXON CONCRETE & MASONRY PRIMER INTERIOR/EXTERIOR LATEX A24W08300	2	SUPERPAINT EXTERIOR LATEX PAINT GLOSS A84W01151
DIMENSION LUMBER SUBSTRATES: FOOT TRAFFIC SURFACES: LUMBER DECKING, STAIRS	1	ARMORSEAL TREAD-PLEX PRIMER ACRYLIC FLOOR COATING B40W00110	2	ARMORSEAL TREAD-PLEX ACRYLIC FLOOR COATING B40W0111

SURFACE	PRIMER # COATS	PRIMER PRODUCT	FINISH # COATS	FINISH PRODUCT
GALVANIZED STEEL/METAL:SEMI-GLOSS	1	PITT-TECH ONE PACK INDUSTRIAL PRIMER 90-708 SERIES	2	PITT TECH PLUS 4216 HP SEMI-GLOSS DTM ENAMEL
GALVANIZED STEEL/METAL: GLOSS	1	PITT-TECH ONE PACK INDUSTRIAL PRIMER 90-708 SERIES	2	PITT TECH ONE PACK GLOSS INDUSTRIAL ENAMEL 90-374
WOOD/TRIM/SIDING: SEMI-GLOSS	1	SEAL GRIP UNIVERSAL ACRYLIC PRIMER 17-421XI	2	PPG SPEEDHIDE SEMI-GLOSS LATEX 6-400XI SERIES
WOOD FASCIA: EGGSHELL	1	SEAL GRIP UNIVERSAL ACRYLIC PRIMER 17-421XI	2	SPEEDHIDE EXTERIOR LATEX SATIN FINISH 6-2045XI SERIES
CEMENT FIBER: EGGSHELL (JAMES HARDIE PRODUCTS)	1	PREMACRETE ALKALI RESISTANT PRIMER 4-603XI	2	SPEEDHIDE EXTERIOR SATIN LATEX 6-2045XI SERIES
CEMENT FIBER: SEMI-GLOSS (JAMES HARDIE PRODUCTS)	1	PREMACRETE ALKALI RESISTANT PRIMER 4-603XI	2	SPEEDHIDE EXTERIOR SEMI-GLOSS LATEX 6-400XI SERIES
STUCCO: EGGSHELL	1	PERMACRETE ALKALI RESISTANT PRIMER 4-603XI	2	SPEEDHIDE EXTERIOR SATIN LATEX 6-2045XI SERIES
STUCCO: SEMI-GLOSS	1	PERMACRETE ALKALI RESISTANT PRIMER 4-603XI	2	SPEEDHIDE EXTERIOR SEMI-GLOSS LATEX 6-400XI SERIES
DIMENSION LUMBER SUBSTRATES: FOOT TRAFFIC SURFACES: LUMBER DECKING, STAIRS	1	PITTSBURG PAINTS 3-510 FLOOR, PROCH, DECK SATIN LATEX	2	PITTSBURG PAINTS 3-510 FLOOR, PROCH, DECK SATIN LATEX

* THE PAINT SPEC SHALL BE BASED UPON ONE OF THESE 3 MANUFACTURER SPECIFICATIONS WITHOUT DEVIATION.

NOTES:
1. ALL WALLS & CEILINGS (U.N.O.) TO BE EGGSHELL FINISH.
2. ALL WALLS AND CEILINGS AT BATHROOMS, KITCHEN, AND LAUNDRY ROOMS TO BE SEMI-GLOSS.

1 / A0.2A

PAINT SPECIFICATIONS

N.T.S.

P-1
PPG11-07
GOBBLEDYGOOK

P-2
PPG11-04
COUNTRY STYLE

P-3
PPG1201-4
GENTLE DOE

P-4
PPG1201-7
LUCKY PENNY

P-5
PPG1146-7
EMERALD POOL

P-6
PPG1146-5
PALMETTO

P-7
PPG16-12
ITALIAN SAFFRON

P-8
PPG1208-4
GOLD BUFF

P-9
PPG1078-6
COCOA DELIGHT

P-10
PPG1085-7
FIG BRANCHES

Copyright 2020. All rights reserved-no part of this document may be reproduced in any form without permission of Klar and Klar Architects, inc.

revision	by

SIXTEENTH SQUARE - BUILDING I

1523 DR. MARTIN LUTHER KING JR. ST. S. ST. PETERSBURG, FL 33705

klar and klar
architects + interior designers

www.klarklar.com

28473 us 19 n
suite 602
clearwater, fl 33761
727-799-5420

American Institute of Architects member firm

☐ Roberta S. Klar
☒ Steven L. Klar

AA 0002321

☐ Preliminary
☒ Permitting Set
☒ Construction Set

Date: 12/15/20

Drawn: SK/EP

Sheet: A0.2A

Of:

METAL ROOFING SPECIFICATIONS

PART 1 - GENERAL

1.01 DESCRIPTION
- A. GENERAL
  1. FURNISH ALL LABOR, MATERIALS, TOOLS, EQUIPMENT AND SERVICES FOR ALL PERFORMED AS INDICATED, IN ACCORD WITH PROVISIONS OF CONTRACT DOCUMENTS.
  2. COMPLETELY COORDINATE WITH WORK OF ALL OTHER TRADES.
  3. ALTHOUGH SUCH WORK IS NOT SPECIFICALLY INDICATED, FURNISH AND INSTALL ALL SUPPLEMENTARY OR MISCELLANEOUS ITEMS, APPURTENANCES AND DEVICES INCIDENTAL TO OR NECESSARY FOR A SOUND, SECURE AND COMPLETE INSTALLATION.

1.02 QUALITY ASSURANCE
- A. APPLICABLE STANDARDS:
  1. SMACNA: "ARCHITECTURAL SHEET METAL MANUAL", SHEET METAL AND AIR CONDITIONING CONTRACTORS NATIONAL ASSOCIATION, INC.
- B. MANUFACTURER'S QUALIFICATIONS:
  1. MANUFACTURER HAS A MINIMUM OF THREE YEARS EXPERIENCE IN MANUFACTURING PANELS OF THIS NATURE. PANELS SPECIFIED IN THIS SECTION SHALL BE PRODUCED IN A FACTORY ENVIRONMENT (NOT JOB SITE) TO ASSURE THE HIGHEST LEVEL OF QUALITY CONTROL. A LETTER CERTIFYING COMPLIANCE SHOULD ACCOMPANY THE PRODUCT MATERIAL SUBMITTALS.
- C. INSTALLER'S QUALIFICATIONS:
  1. INSTALLER OF THE SYSTEM SHALL BE FACTORY TRAINED BY THE MANUFACTURER FOR THE PROPOSED SYSTEM AND MEET THE FOLLOWING MINIMUM CRITERIA:
     - a. PROJECT FOREMAN IS THE PERSON HAVING RECEIVED SPECIFIC TRAINING IN THE PROPER INSTALLATION OF THE SPECIFIED SYSTEM AND WILL BE PRESENT TO SUPERVISE WHENEVER MATERIAL IS BEING INSTALLED.
     - b. PROVIDE CERTIFICATION LETTER THAT INSTALLER HAS A MINIMUM OF THREE YEARS OF METAL PRODUCT INSTALLATION EXPERIENCE IMMEDIATELY PRECEDING THE DATE UPON WHICH WORK IS TO COMMENCE.

1.03 SYSTEM PERFORMANCE REQUIREMENTS
- A. PERFORMANCE TESTING:
  1. METAL ROOFING SYSTEM MUST BE TESTED IN ACCORDANCE WITH UNDERWRITERS LABORATORIES, INC. (UL) TEST METHOD 580 "TESTS FOR UPLIFT RESISTANCE OF ROOF ASSEMBLIES", FBC TAS 125, AND/OR ASTM E-1592.
  2. PANEL CLIP SPACING WILL NOT EXCEED SPACINGS SPECIFIED IN THE PRODUCT APPROVAL AND MUST BE DESIGNED TO MEET REQUIREMENTS OF SPECIFIED BUILDING CODES AND DESIGN LOADS.
  3. RESIST THE ROOF DESIGN PRESSURES CALCULATED IN ACCORDANCE WITH THE FLORIDA BUILDING CODE. CAPACITY FOR GAUGE, SPAN OR LOADING OTHER THAN THOSE TESTED MAY BE DETERMINED BY INTERPOLATING TEST RESULTS.

1.04 SUBMITTALS
- A. SHOP DRAWINGS:
  1. SUBMIT COMPLETE SHOP DRAWINGS AND ERECTION DETAILS, APPROVED BY THE GENERAL CONTRACTOR AND SUBMITTED TO THE ARCHITECT FOR REVIEW. DO NOT PROCEED WITH MANUFACTURE PRIOR TO REVIEW OF SHOP DRAWINGS.
- B. PERFORMANCE TESTS:
  1. SUBMIT CERTIFIED TEST RESULTS BY A RECOGNIZED TESTING LABORATORY OR AGENCY STATING THE METAL ROOF SYSTEM HAS BEEN TESTED IN ACCORDANCE WITH THE SPECIFIED TEST METHODS LISTED IN "1.03".
- C. CALCULATIONS:
  1. SUBMIT ENGINEERING CALCULATIONS DEFINING THE METAL ROOF SYSTEM DESIGN LOADS FOR ALL ROOF AREAS BASED ON SPECIFIED BUILDING CODES, ALLOWABLE CLIP LOADS AND REQUIRED TYPE AND NUMBER OF FASTENERS PER CLIP TO SECURE THE PANEL CLIPS TO THE SPECIFIED ROOF SUBSTRUCTURE.
- D. WARRANTY(S):
  1. METAL ROOF SYSTEM MANUFACTURER, UPON FINAL ACCEPTANCE FOR PROJECT, FURNISH A WARRANTY COVERING BARE METAL AGAINST RUPTURE, STRUCTURAL FAILURE AND PERFORATION DUE TO NORMAL ATMOSPHERIC CORROSION EXPOSURE FOR A PERIOD OF 20 YEARS.

PART 2 - PRODUCTS
GULFCOAST GULFLOK SERIES

2.01 MATERIALS
- A. METAL ROOF SYSTEM PROFILE:
  1. 1 INCH HIGH X 3/4 INCH WIDE RIB X 16 INCH WIDE PANELS, STRIATED.
- B. METAL ROOF SYSTEM STYLE:
  1. VERTICAL LEG, CONCEALED FASTENER, STANDING SEAM, UTILIZING MALE AND FEMALE RIB CONFIGURATIONS, CONTINUOUSLY LOCKED TOGETHER BY AN ELECTRICALLY POWERED MECHANICAL SEAMING DEVICE DURING INSTALLATION.
- C. GAUGE:
  1. 24 GAUGE.
- D. SUBSTRATE:
  1. GALVALUME PLUS STEEL SHEET, MINIMUM YIELD OF 50,000 PSI.
- E. CLIP:
  1. UTILITY CLIP (HW238), 24 GAUGE (GAUGE TO BE DETERMINED AT SHOP DRAWINGS). SPACING DETERMINED BY WIND UPLIFT.
- F. TEXTURE:
  1. STRIATED.
- G FINISH:
  1. KYNAR 500 ASH GRAY (20 YEAR WARRANTY).

2.02 MISCELLANEOUS MATERIALS
- A. FASTENERS:
  1. ALL SELF-TAPPING/SELF-DRILLING FASTENERS, BOLTS, NUTS, SELF-LOCKING RIVETS AND OTHER SUITABLE FASTENERS SHALL BE DESIGNED TO WITHSTAND SPECIFIED DESIGN LOADS.
  2. USE S.S. LONG LIFE FASTENERS FOR ALL EXTERIOR METAL ROOF SYSTEM APPLICATIONS.
- B. ACCESSORIES:
  1. PROVIDE ALL COMPONENTS REQUIRED PER THE METAL ROOF SYSTEM MANUFACTURER'S APPROVED SHOP DRAWINGS FOR A COMPLETE METAL ROOF SYSTEM TO INCLUDE PANELS, PANEL CLIPS, TRIM/FLASHING, FASCIAS, RIDGE, CLOSURES, SEALANTS, FILLERS AND ANY OTHER REQUIRED ITEMS.
- C. ALL OUTSIDE CLOSURES WILL BE FABRICATED FROM GALVALUME PLUS OR PRE-PAINTED GALVALUME SHEET STEEL OF THE SAME GAUGE, FINISH AND COLOR AS THE PANELS.
- D. ALL TAPE SEAL IS TO BE A PRESSURE SENSITIVE, 100 PERCENT SOLIDS, POLYISOBUTYLENE COMPOUND SEALING TAPE WITH A RELEASE PAPER BACKING. PROVIDE PERMANENTLY ELASTIC, NON-SAGGING, NON-TOXIC, NON-STAINING TAPE SEAL APPROVED BY THE METAL ROOF SYSTEM MANUFACTURER.
- E. ALL JOINT SEALANT IS TO BE A ONE-PART ELASTOMERIC POLYURETHANE SEALANT APPROVED BY THE METAL ROOF SYSTEM MANUFACTURER.

2.03 FABRICATION
- A. MATERIAL SHALL BE IN-LINE LEVELED PRIOR TO ROLL FORMING PANEL PROFILE.
- B. WHERE POSSIBLE, ROLL FORM PANELS IN CONTINUOUS LENGTHS, FULL LENGTH OF DETAILED RUNS.
- C. STANDARD PANEL LENGTH SHALL BE NO MORE THAN 50 FEET LONG (FOR LONGER LENGTH.
- D. FABRICATE TRIM/FLASHING AND ACCESSORIES TO DETAILED PROFILES.
- E. FABRICATE TRIM/FLASHING FROM SAME MATERIAL AS PANEL.

PART 3 - EXECUTION

3.01 SURFACE CONDITIONS
- A. EXAMINATION:
  1. INSPECT INSTALLED WORK OF OTHER TRADES AND VERIFY THAT SUCH WORK IS COMPLETE TO A POINT WHERE THIS WORK MAY CONTINUE.
  2. VERIFY THAT INSTALLATION MAY BE MADE IN ACCORDANCE WITH APPROVED SHOP DRAWINGS AND MANUFACTURER'S INSTRUCTIONS. THIS SPECIFICALLY INCLUDES VERIFYING THAT SECONDARY STRUCTURAL MEMBERS AND/OR DECKING ARE INSTALLED TO MEET UL AND BUILDING CODE REQUIREMENTS. COORDINATE WITH METAL ROOF SYSTEM MANUFACTURER TO INSURE THAT REDUCED CLIP SPACINGS AT EAVE, RAKE, RIDGE AND CORNER AREAS ARE ACCOMMODATED.
- B. DISCREPANCIES:
  1. IN EVENT OF DISCREPANCY, NOTIFY THE ARCHITECT (OWNER).
  2. DO NOT PROCEED WITH INSTALLATION UNTIL DISCREPANCIES HAVE BEEN RESOLVED.

3.02 INSTALLATION
- A. INSTALL METAL ROOF SYSTEM SO THAT IT IS WEATHERTIGHT, WITHOUT WAVES, WARPS, BUCKLES, FASTENING STRESSES OR DISTORTION, ALLOWING FOR EXPANSION AND CONTRACTION.
- B. INSTALL METAL ROOF SYSTEM IN ACCORDANCE WITH MANUFACTURER'S INSTRUCTIONS AND SHOP DRAWINGS.
- C. PROVIDE CONCEALED ANCHORS AT ALL PANEL ATTACHMENT LOCATIONS.
- D. INSTALL PANELS PLUMB, LEVEL AND STRAIGHT WITH SEAMS AND RIBS PARALLEL, CONFORMING TO DESIGN AS INDICATED.

3.03 CLEANING, PROTECTION
- A. DISPOSE OF EXCESS MATERIALS AND REMOVE DEBRIS FROM SITE.
- B. CLEAN WORK IN ACCORDANCE WITH MANUFACTURER'S RECOMMENDATIONS.
- C. PROTECT WORK AGAINST DAMAGE UNTIL FINAL ACCEPTANCE. REPLACE OR REPAIR TO THE SATISFACTION OF THE ARCHITECT (OWNER), ANY WORK THAT BECOMES DAMAGED PRIOR TO FINAL ACCEPTANCE.
- D. TOUCH UP MINOR SCRATCHES AND ABRASIONS WITH TOUCH UP PAINT SUPPLIED BY THE METAL ROOF SYSTEM MANUFACTURER.
- E. DO NOT ALLOW PANELS OR TRIM TO COME IN CONTACT WITH DISSIMILAR METALS SUCH AS COPPER, LEAD OR GRAPHITE. WATER RUN-OFF FROM THESE MATERIALS IS ALSO PROHIBITED. THIS SPECIFICALLY INCLUDES CONDENSATE FROM ROOF TO TOP A/C UNITS.

Copyright 2020. All rights reserved-no part of this document may be reproduced in any form without permission of klar and klar Architects, Inc.

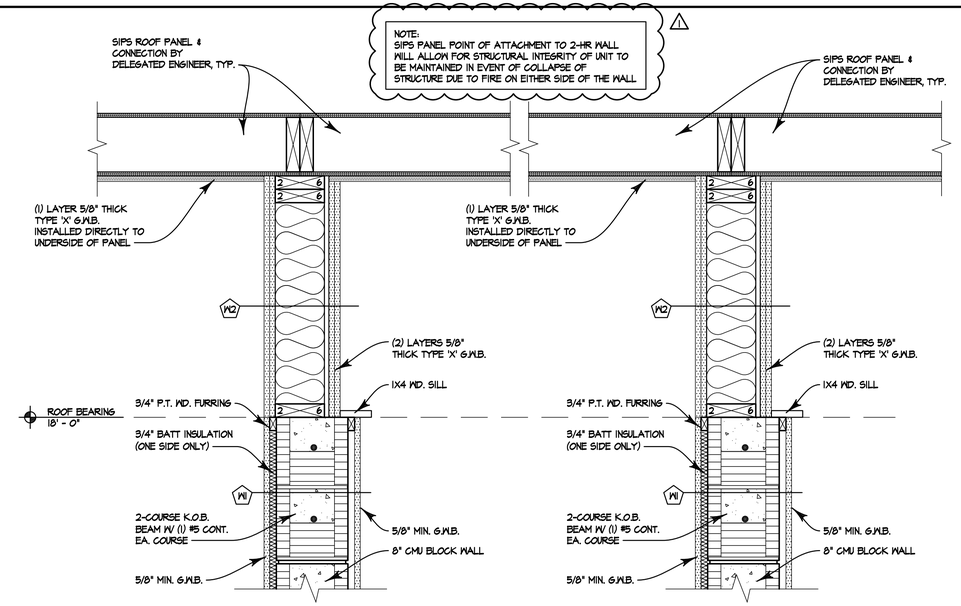

4 / A0.2B — RATED WALL SECT.

SCALE: 1 1/2"=1'-0"

NOTE:
1. 5/8" TYPE 'X' G.W.B. MUST BE APPLIED DIRECTLY TO UNDERSIDE OF PLYWOOD TO ACHIEVE RATING.
2. ENTIRE ROOF ASSEMBLY MEETS 1-HR. RATING.
3. ANY OPENINGS OR ROOF PENETRATIONS ARE NOT TO BE WITHIN 4' OF THE COMMON WALLS.

DESIGN NO. U301

BEARING WALL RATING - 2 HR.

1. GYPSUM BOARD: (2) LAYERS 5/8" THICK TYPE 'X' GYPSUM BOARD.
2. RESILIENT CHANNEL: 1/2" 25 GA. RESILIENT CHANNEL SPACES 24" O.C.
3. WOOD STUDS: 2X6 WOOD STUDS @ 16" O.C.
4. INSULATION: 3-1/2" GLASS FIBER BATT INSULATION IN CAVITY
5. GYPSUM BOARD: (2) LAYERS 5/8" THICK TYPE 'X' GYPSUM BOARD.
6. JOINTS STAGGERED 16" EACH LAYER AND SIDE. (LOAD BEARING)

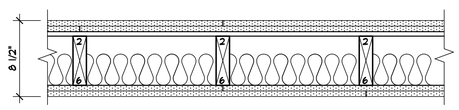

STC: 56
SOUND TEST: USG-161205
SYSTEM THICKNESS: 8 1/2"

DESIGN NO. U905

BEARING WALL RATING - 2 HR.
NON-BEARING WALL RATING - 2 HR.

1. CONCRETE BLOCKS - VARIOUS DESIGNS. CLASSIFICATION D-2 (2 HR).
2. MORTAR - BLOCKS LAID IN FULL BED OF MORTAR, NOM. 3/8 IN. THICK, OF NOT LESS THAN 2-1/4 AND NOT MORE THAN 3-1/2 PARTS OF CLEAN SHARP SAND TO 1 PART PORTLAND CEMENT (PROPORTIONED BY VOLUME) AND NOT MORE THAN 50 PERCENT HYDRATED LIME (BY CEMENT VOLUME). VERTICAL JOINTS STAGGERED.
3. PORTLAND CEMENT STUCCO OR GYPSUM PLASTER - ADD 1/2 HR. TO CLASSIFICATION IF USED. WHERE COMBUSTIBLE MEMBERS ARE FRAMED IN WALL, PLASTER OR STUCCO MUST BE APPLIED ON THE FACE OPPOSITE FRAMING TO ACHIEVE A MAX. CLASSIFICATION OF 1-1/2 HR. ATTACHED TO CONCRETE BLOCK (ITEM 1).
4. LOOSE MASONRY FILL - IF ALL CORE SPACES ARE FILLED WITH LOOSE DRY EXPANDED SLAG, EXPANDED CLAY OR SHALE (ROTARY KILN PROCESS), WATER REPELLENT VERMICULITE MASONRY FILL INSULATION, OR SILICONE TREATED PERLITE LOOSE FILL INSULATION ADD 2 HR. TO CLASSIFICATION.
5. FOAMED PLASTIC - (OPTIONAL-NOT SHOWN) - 1-1/2 IN. THICK MAX., 4 FT. WIDE SHEATHING ATTACHED TO CONCRETE BLOCKS (ITEM 1).

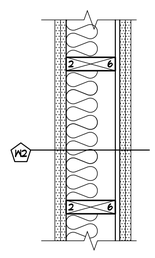

3 / A0.2B — W2 2-HR. PARTITION

SCALE: 1 1/2"=1'-0"

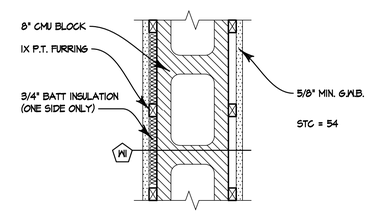

2 / A0.2B — W1 2-HR. CMU PARTITION

SCALE: 1 1/2"=1'-0"

NOTE:
1. ADDITIONAL RATING IS THE RESULT OF CONSTRUCTION AND NOT A CODE REQUIREMENT.
2. ALL WALLS SEPARATING DWELLING UNITS FROM EACH OTHER OR FROM PUBLIC OR SERVICE AREAS SHALL HAVE A SOUND TRANSMISSION CLASS (STC) OF NOT LESS THAN 50 (45 IF FIELD TESTED) PER F.B.C. 1207.2.
3. ALL FLOOR/CEILING ASSEMBLIES BETWEEN DWELLING UNITS OR BETWEEN A DWELLING UNIT AND A PUBLIC OR SERVICE AREA WITHIN THE STRUCTURE SHALL HAVE AN IMPACT INSULATION CLASS (IIC) RATING OF NOT LESS THAN 50 (45 IF FIELD TESTED) PER F.B.C. 1207.3.

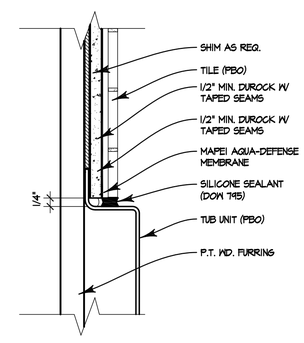

1 / A0.2B — BATHTUB DETAIL

1 1/2"=1'-0"

NOTE:
1. REFER TO TCNA B412-11.
2. USE OF A MEMBRANE ON WALLS IS REQUIRED. USE MAPEI AQUA DEFENSE W/ REINFORCING FABRIC AT ALL CORNERS/WALL/FLOOR TRANSITION AND DRAIN OR SCHLUTER KERDI WATERPROOFING MEMBRANE.
3. SHOWER RECEPTORS, CURBS, SEATS, ETC. MUST BE PROPERLY WATERPROOFED AND INSTALLED TO AVOID WATER DAMAGE TO BLDG. MATERIALS.

	revision	by
1	1/20/21 BLDG. REVIEW	EP

SIXTEENTH SQUARE - BUILDING 1
1523 DR. MARTIN LUTHER KING JR. ST. S. ST. PETERSBURG, FL 33705

klar and klar architects + interior designers
www.klarklar.com
28473 us 19 n
suite 602
clearwater, fl 33761
727-799-5420
American Institute of Architects member firm
☐ Roberta S. Klar
☒ Steven L. Klar
AA 0002321

☐ Preliminary
☒ Permitting Set
☒ Construction Set

Date: 12/15/20
Drawn: SK/EP
Sheet: A0.2B
Of:

STRUCTURAL NOTES:

MISCELLANEOUS

1. THE STRUCTURAL SYSTEM IS UNSTABLE UNTIL ALL CONNECTIONS HAVE BEEN MADE AND ALL CONCRETE HAS REACHED ITS MINIMUM DESIGN STRENGTH, AS SHOWN IN THE STRUCTURAL DOCUMENTS.

2. CONTRACTOR IS RESPONSIBLE FOR MEANS AND METHODS OF CONSTRUCTION TO ENSURE THE SAFETY OF THE BUILDING UNTIL STRUCTURAL SYSTEM IS COMPLETED. THIS INCLUDES, BUT IS NOT LIMITED TO, THE ADDITION OF WHATEVER TEMPORARY BRACING, SHORING, GUYS OR TIE_DOWNS THAT MAY BE NECESSARY. SUCH MATERIAL SHALL BE REMOVED AND SHALL REMAIN THE PROPERTY OF THE CONTRACTOR AFTER COMPLETION OF THE PROJECT.

3. CONTRACTOR TO SUPPORT, BRACE AND SECURE EXISTING STRUCTURE AS REQUIRED. CONTRACTOR IS SOLELY RESPONSIBLE FOR THE SAFETY OF THE BUILDING DURING CONSTRUCTION.

4. APPLICABLE BUILDING CODE: 6TH EDITION (2017) FLORIDA BUILDING CODE.

5. GRAVITY DESIGN LOADS:

AREA	SUPERIMPOSED LIVE LOAD	TOTAL DEAD LOAD
ROOF	20 PSF	25 PSF
FLOOR	40 PSF	25 PSF

WIND DESIGN CRITERIA:
ULTIMATE WIND SPEED: VULT = 145 MPH (3 SECOND GUST)
EQUIVALENT NOMINAL BASIC WIND SPEED VASD = 113 MPH (3 SECOND GUST)
RISK CATEGORY = II
EXPOSURE CATEGORY = C
ENCLOSED BUILDING INTERNAL PRESSURE COEFFICIENT, GCPI= +/-0.18
WIND BORNE DEBRIS REGION

6. ALL MATERIALS AND WORKMANSHIP SHALL BE IN ACCORDANCE WITH THE REFERENCED BUILDING CODE.

7. COORDINATE ALL DIMENSIONS AND ELEVATIONS WITH THE ARCHITECTURAL DRAWINGS. DO NOT SCALE DRAWINGS.

8. CONTACT ENGINEER WITH ANY QUESTIONS OR DISCREPANCIES FOUND ON DRAWINGS.

9. SECTIONS AND DETAILS ARE REFERENCED IN TYPICAL LOCATIONS BUT ALSO APPLY TO ALL OTHER SIMILAR CONDITIONS.

10. CONTRACTOR TO VERIFY ALL EXISTING DIMENSIONS, ELEVATIONS, AND CONDITIONS PRIOR TO BEGINNING CONSTRUCTION.

11. SUBMIT SHOP DRAWINGS AS REQUIRED HEREIN. ALLOW FOR TWO WEEKS REVIEW TIME AFTER RECEIPT OF SUBMITTALS BY THIS FIRM. ALL SUBMITTALS SHALL BE CHECKED AND SIGNED BY THE GENERAL CONTRACTOR AND SIGNED/SEALED BY THE DELEGATED ENGINEER, WHERE SPECIFIED HEREIN.

12. CONTRACTOR SHALL NOT BE RELIEVED FROM RESPONSIBILITY FOR ERRORS OR OMISSIONS IN SHOP DRAWINGS OR MIX DESIGNS BY THE ENGINEER'S REVIEW THEREOF.

13. ANY CHANGES TO THE STRUCTURE SHALL HAVE BEEN REVIEWED AND APPROVED IN WRITING BY THE ENGINEER PRIOR TO COMMENCING WORK ON ITEMS AFFECTED.

14. CONTRACTOR SHALL NOTIFY THIS OFFICE WHEN THE STRUCTURAL SYSTEM IS SUBSTANTIALLY COMPLETED, AND BEFORE SHEATHING, CEILINGS, OR ROOFING IS INSTALLED.

DELEGATED ENGINEER

1. WHERE NOTED HEREIN, A LICENSED PROFESSIONAL (DELEGATED) ENGINEER SHALL BE RETAINED TO DESIGN THE PRODUCT OR ASSEMBLY.

2. THE DELEGATED ENGINEER SHALL BE EXPERIENCED IN THE DESIGN OF THE REFERENCED PRODUCT OR ASSEMBLY.

3. THE DELEGATED ENGINEER MUST BE PROVIDED WITH A COPY OF THESE DRAWINGS AND SPECIFICATIONS.

4. IT IS THE DELEGATED ENGINEER'S RESPONSIBILITY TO REVIEW THE ENGINEER OF RECORD'S WRITTEN ENGINEERING REQUIREMENTS AND AUTHORIZATION FOR THE DELEGATED ENGINEERING DOCUMENT TO DETERMINE THE APPROPRIATE SCOPE OF ENGINEERING.

5. THE DELEGATED ENGINEERING DOCUMENT SHALL COMPLY WITH THE WRITTEN ENGINEERING REQUIREMENTS RECEIVED FROM THE ENGINEER OF RECORD. THEY SHALL INCLUDE THE PROJECT IDENTIFICATION AND THE CRITERIA USED AS A BASIS FOR ITS PREPARATION. IF A DELEGATED ENGINEER DETERMINES THERE ARE DETAILS, FEATURES OR UNANTICIPATED PROJECT LIMITS WHICH CONFLICT WITH THE WRITTEN ENGINEERING REQUIREMENTS PROVIDED BY THE ENGINEER OF RECORD, THE DELEGATED ENGINEER SHALL TIMELY CONTACT THE ENGINEER OF RECORD FOR RESOLUTION OF CONFLICTS.

6. THE DELEGATED ENGINEER SHALL FORWARD THE DELEGATED ENGINEERING DOCUMENT TO THE ENGINEER OF RECORD FOR REVIEW. ALL FINAL DELEGATED ENGINEERING DOCUMENTS REQUIRE THE IMPRESSED SEAL AND SIGNATURE OF THE DELEGATED ENGINEER AND INCLUDE:
   A) DRAWINGS INTRODUCING ENGINEERING INPUT SUCH AS DEFINING THE CONFIGURATION OR STRUCTURAL CAPACITY OF STRUCTURAL COMPONENTS AND/OR THEIR ASSEMBLY INTO STRUCTURAL SYSTEMS.
   B) CALCULATIONS.

SITE WORK

1. A SUBSURFACE INVESTIGATION HAS BEEN COMPLETED AT THE PROJECT SITE BY CENTRAL FLORIDA TESTING LABORATORIES, INC. SOIL BORING LOGS AND SITE PREPARATION PROCEDURES ARE INCLUDED IN THE PROJECT SOILS REPORT #230793, DATED SEPTEMBER 19, 2019, WHICH IS AN INTEGRAL PART OF THESE CONTRACT DOCUMENTS.

2. SITE WORK SHALL BE DONE IN STRICT ACCORDANCE WITH THE PROJECT SOILS REPORT.

3. CONTRACTOR SHALL REVIEW THE SOILS REPORT AND VERIFY THAT TEST BORINGS HAVE BEEN DONE UNDER ALL BUILDING(S) PRIOR TO BEGINNING EARTHWORK.

4. INFORMATION FROM GEOTECHNICAL REPORT:
   A) DESIGN SOIL BEARING PRESSURE = 2,000 PSF.
   B) ESTIMATED MAXIMUM SETTLEMENT = 1 INCH.
   C) ESTIMATED DIFFERENTIAL SETTLEMENT = 1/2 INCH.
   D) **SUCCESSFUL COMPLETION OF THE DENSIFICATION RECOMMENDATIONS AS OUTLINED IN THE REPORT WILL PROVIDE A SOIL PROFILE WITH AN ALLOWABLE BEARING CAPACITY OF 2,000 PSF WITH STANDARD VALUES FOR ESTIMATED DIFFERENTIAL AND TOTAL SETTLEMENT. THE ESTIMATED DIFFERENTIAL WILL BE 1/2 INCH OR LESS IN 50 LINEAR FEET OF CONTINUOUS WALL FOOTING AND THE ESTIMATED TOTAL SETTLEMENT WILL BE NOT MORE THAN 1 INCH ACROSS FOUNDATIONS. IF DENSIFICATION EFFORTS ARE NOT COMPLETED TO THE RECOMMENDED VALUES, THEN EXCESSIVE DIFFERENTIAL AND OR TOTAL SETTLEMENT CAN BE EXPECTED.**

5. A QUALIFIED TESTING LABORATORY SHALL BE RETAINED TO PERFORM THE FOLLOWING MINIMUM TESTS. REFER TO SOILS REPORT FOR ANY ADDITIONAL TESTING.
   A) ONE DENSITY TEST FOR EACH 2,000 SQUARE FEET OF COMPACTED SUBGRADE AND COMPACTED FILL.
   B) ONE DENSITY TEST AT EACH COLUMN FOOTING.
   C) ONE DENSITY TEST PER 50 FEET OF WALL FOOTING.

6. ONE COPY OF ALL TEST REPORTS SHALL BE SENT DIRECTLY TO OWNER, ARCHITECT, STRUCTURAL ENGINEER, AND GENERAL CONTRACTOR.

7. FOUNDATION WALLS THAT RETAIN EARTH SHALL BE BRACED AGAINST BACKFILLING PRESSURES UNTIL FLOOR SLABS AT TOP AND BOTTOM ARE IN PLACE.

8. THE SIDES OF FOOTINGS MAY BE EARTH_FORMED IF THE EXCAVATION CAN BE KEPT VERTICAL, CLEAN, AND STABLE, OTHERWISE, PLYWOOD FORMS MUST BE USED.

9. EXERCISE CARE WHEN COMPACTING NEAR ADJACENT STRUCTURES. FOLLOW THE RECOMMENDATIONS IN THE SOILS REPORT AND DOCUMENT EXISTING CONDITIONS WITH PHOTOGRAPHS PRIOR TO STARTING WORK.

10. PRIOR TO CONSTRUCTION, CONTRACTOR SHALL LOCATE ALL EXISTING UNDERGROUND UTILITY LINES, TANKS, ETC. WITHIN THE CONSTRUCTION AREA AND RELOCATE THEM AS DIRECTED BY THE CIVIL ENGINEER.

CAST IN PLACE CONCRETE

1. ALL CAST-IN-PLACE CONCRETE WORK INCLUDES REINFORCING STEEL AND RELATED WORK SHOWN INCLUDING FORMWORK, SETTING ANCHOR BOLTS, PLATES, FRAMES, DOWELS FOR MASONRY OR OTHER ITEMS EMBEDDED IN CONCRETE.

2. APPLICABLE STANDARDS

ACI NUMBER	TITLE
117	STANDARD SPECIFICATIONS FOR TOLERANCES FOR CONCRETE CONSTRUCTION
226	GROUND GRANULATED BLAST-FURNACE SLAG
301	STANDARD SPECIFICATIONS FOR STRUCTURAL CONCRETE FOR BUILDINGS
302	GUIDE FOR CONCRETE FLOOR AND SLAB CONSTRUCTION
304	GUIDE FOR MEASURING MIXING, TRANSPORTING AND PLACING CONCRETE
304.2R	PLACING CONCRETE BY PUMPING METHODS.
305R	HOT WEATHER CONCRETING
306R	COLD WEATHER CONCRETING
308	STANDARD PRACTICE FOR CURING CONCRETE
309R	GUIDE FOR CONSOLIDATION OF CONCRETE
315	MANUAL OF STANDARD PRACTICE FOR DETAILING CONCRETE STRUCTURES
318	BUILDING CODE REQUIREMENTS FOR REINFORCED CONCRETE
347	RECOMMENDED PRACTICE FOR CONCRETE FORMWORK

CRSI NUMBER	TITLE
63	RECOMMENDED PRACTICE FOR PLACING REINFORCING BARS

3. CONCRETE MATERIALS
   A) PORTLAND CEMENT - ASTM C 150, TYPE I
   B) AGGREGATES - NORMAL WEIGHT CONCRETE, COARSE AND FINE, ASTM C33. STRUCTURAL LIGHT WEIGHT ASTM C330.
   C) AIR-ENTRAINING - ASTM C260
   D) WATER REDUCING - ASTM C494, TYPE A
   E) WATER - FRESH, CLEAN AND POTABLE
   F) NO ACCELERATORS, RETARDERS OR ADMIXTURES CONTAINING CHLORIDES WILL BE PERMITTED
   G) FLY-ASH - ASTM C618, CLASS F, 20% MAXIMUM OF CEMENTITIOUS MATERIAL BY WEIGHT. DO NOT USE FOR EXPOSED SLABS OR ARCHITECTURAL CONCRETE.
   H) SUPER PLASTICIZER - ASTM C494, TYPE F OR G, WHERE AUTHORIZED BY THE ENGINEER.
   I) GROUND GRANULATED BLAST-FURNACE SLAG CEMENT - ASTM C989, 50% MAXIMUM BY WEIGHT.
   J) MAXIMUM AGGREGATE SIZE - FOOTINGS = #57, OTHERS #67

4. REINFORCING MATERIALS
   A) DEFORMED BARS - ASTM A615, GRADE 60
   B) SMOOTH DOWELS - ASTM A615, PLAIN BARS, MINIMUM YIELD STRENGTH OF 60,000 PSI.
   C) CORROSION RESISTANT UNCOATED STEEL (MMFX-2) - ASTM A615, GRADE 75 AND ASTM A1035 LOW-CARBON (8% MINIMUM) CHROMIUM BY MMFX OR EQUAL.
   D) WELDED WIRE FABRIC - ASTM A185, PLAIN WIRE FABRIC IN FLAT SHEETS ONLY.
   E) ACCESSORIES TO CONFORM TO ACI 315.
   F) WHERE CONCRETE SURFACES ARE EXPOSED, MAKE THOSE PORTIONS OF ALL ACCESSORIES IN CONTACT WITH THE CONCRETE SURFACE OR WITHIN 1/2 INCH THEREOF, OF PLASTIC OR STAINLESS STEEL.

5. PROVIDE THE FOLLOWING MINIMUM CONCRETE STRENGTHS AT 28 DAYS:
   A) FOOTINGS, SLAB-ON-GRADE--------------------3000 PSI
   B) MASONRY WALL BEAMS, TIE COLUMNS------------3000 PSI
   C) FORMED COLUMNS, WALLS, BEAMS & SLABS-------4000 PSI

6. CONCRETE MUST BE BATCHED, MIXED AND TRANSPORTED IN ACCORDANCE WITH THE SPECIFICATIONS FOR READY-MIXED CONCRETE ASTM C94.

7. REQUIRED SLUMP = 4 PLUS OR MINUS ONE INCH.

8. CONCRETE MUST BE PLACED WITHIN 90 MINUTES OF BATCH TIME. WHEN AIR TEMPERATURE IS BETWEEN 85 AND 90 DEGREES F, REDUCE MIXING AND DELIVERY TIME TO 75 MINUTES. WHEN AIR TEMPERATURE IS HIGHER THAN 90 DEGREES F, REDUCE MIXING AND DELIVERY TIME TO 60 MINUTES.

9. DO NOT ADD WATER AT THE JOB SITE WITHOUT APPROVAL OF THE PROJECT SUPERINTENDENT. DO NOT EXCEED THE SLUMP LIMITATION. USE ONLY COLD WATER FROM THE TRUCK TANK. ANY ADDED WATER MUST BE INDICATED ON THE DELIVERY TICKET PLUS THE NAME OF THE PERSON AUTHORIZING. TEST CYLINDERS SHALL BE TAKEN AFTER THE ADDITION OF WATER.

10. LAP SPLICE REINFORCING PER CONCRETE LAP SCHEDULE MINIMUM UNLESS OTHERWISE SHOWN OR NOTED.

11. PROVIDE CORNER BARS AT ALL WALL FOOTING, WALL AND BEAM CORNERS. SIZE AND NUMBER TO MATCH HORIZONTAL BARS.

12. PROVIDE FOUNDATION DOWELS TO MATCH SIZE AND NUMBER OF VERTICAL BARS. EMBED DOWELS TO:
    A) 3" ABOVE BOTTOM OF FOOTINGS

13. REINFORCEMENT SHALL BE FASTENED AND SECURED TOGETHER TO PREVENT DISPLACEMENT BY CONSTRUCTION LOADS OR THE PLACING OF CONCRETE.

14. REINFORCING BAR COVER
    A) FOOTINGS 2" (TOP), 3" (SIDES AND BOTTOM)
    B) COLUMNS AND BEAMS 1-1/2"
    C) SLABS 3/4" (INTERIOR), 1-1/2" (EXTERIOR)

15. WHERE BAR LENGTHS ARE GIVEN ON THE DRAWINGS, LENGTH OF HOOK, IF REQUIRED, IS NOT INCLUDED.

16. SELECT PROPORTIONS IN ACCORDANCE WITH ACI 301 TO PROVIDE CONCRETE CAPABLE OF BEING PLACED WITHOUT EXCESSIVE SEGREGATION AND WITH ACCEPTABLE FINISHING PROPERTIES, DURABILITY, SURFACE HARDENERS, APPEARANCE, AND STRENGTH REQUIREMENTS REQUIRED BY THESE SPECIFICATIONS.

17. CHAIR WELDED WIRE FABRIC REINFORCING AT 3'-0" ON CENTER MAXIMUM IN EACH DIRECTION.

18. MAXIMUM WATER TO CEMENT RATIO WHEN NO BACK-UP DATA IS AVAILABLE:
    A) 4000 PSI, 28-DAY COMPRESSIVE STRENGTH; W/C RATIO, 0.44 MAXIMUM (NON-AIR-ENTRAINED), 0.36 MAXIMUM (AIR-ENTRAINED).
    B) 3000 PSI, 28-DAY COMPRESSIVE STRENGTH; W/C RATIO, 0.58 MAXIMUM (NON-AIR-ENTRAINED), 0.47 MAXIMUM (AIR-ENTRAINED).

19. DATA TO BE SUBMITTED:
    A) INTENDED USAGE AND LOCATION FOR EACH TYPE
    B) MIX DESIGN FOR EACH TYPE
    C) CEMENT CONTENT IN POUNDS-PER-CUBIC YARD
    D) COARSE AND FINE AGGREGATE IN POUNDS/CUBIC YARD
    E) WATER CEMENT RATIO BY WEIGHT
    F) CEMENT TYPE AND MANUFACTURER
    G) SLUMP RANGE
    H) AIR CONTENT
    I) ADMIXTURE TYPE AND MANUFACTURER
    J) PERCENT ADMIXTURE BY WEIGHT
    K) STRENGTH TEST DATA REQUIRED TO ESTABLISH MIX DESIGN.
    L) COMPLETE DETAIL AND PLACING SHOP DRAWINGS FOR ALL REINFORCING STEEL INCLUDING ACCESSORIES THAT HAVE BEEN REVIEWED AND STAMPED BY THE GENERAL CONTRACTOR. INCLUDE ALL REQUIRED DIMENSIONS AND ELEVATIONS (IE. TOP OF CONCRETE)

20. THE GENERAL CONTRACTOR IS RESPONSIBLE FOR PROVIDING THE CONSTRUCTION OF FORMWORK, SHORING AND RE-SHORING IN ACCORDANCE WITH ACI 347.
    A) FORM AND SHORING DESIGN BY A P.E. REGISTERED IN THE STATE OF FLORIDA.

21. SUBMIT FORM WORK AND SHORING DRAWINGS TO LOCAL BUILDING DEPARTMENT WHEN REQUIRED BY FLORIDA THRESHOLD LAW.

22. CONSTRUCTION JOINTS NOT SHOWN ON THE DRAWINGS MUST BE MADE AND LOCATED TO LEAST IMPAIR THE STRENGTH OF THE STRUCTURE.
    A) NO HORIZONTAL CONSTRUCTION JOINTS WILL BE PERMITTED IN BEAMS, GIRDERS AND SLABS.
    B) LOCATION OF ANY CONSTRUCTION JOINT NOT SHOWN IS SUBJECT TO REVIEW AND ACCEPTANCE BY ENGINEER.

23. INTERNAL VIBRATION, PROPERLY APPLIED IS THE REQUIRED METHOD OF CONSOLIDATING PLASTIC CONCRETE.

24. PROVIDE 3/4" CHAMFER ON ALL EXPOSED CORNERS OF COLUMNS, BEAMS AND WALLS UNLESS OTHERWISE NOTED ON ARCHITECTURAL DRAWINGS.

25. CONTRACTOR SHALL VERIFY LOCATIONS OF ALL OPENINGS, SLEEVES, AND SLAB RECESSES AS REQUIRED BY OTHER TRADES BEFORE CONCRETE IS PLACED. NO SLEEVE, OPENINGS, OR INSERT MAY BE PLACED IN BEAMS, JOISTS, OR COLUMN UNLESS APPROVED BY THE ENGINEER.

26. CONTRACTOR SHALL VERIFY EMBEDDED ITEMS INCLUDING, BUT NOT LIMITED TO, ANCHOR BOLTS, BOLT CLUSTERS, WELD PLATES, ETC., BEFORE PLACING CONCRETE. NOTIFY ENGINEER OF ANY CONFLICTS WITH REBAR.

27. SEE ARCHITECTURAL DRAWINGS FOR REQUIRED CONCRETE FINISHES.

28. TESTING
    A) A QUALIFIED TESTING LAB SHALL BE RETAINED TO PERFORM QUALITY CONTROL WORK AND ON-SITE TESTING.
    B) SLUMP TEST - ASTM 143
    C) MOLD AND CURE TEST CYLINDERS (ASTM C-31) AND TEST CYLINDERS FOR STRENGTH (ASTM C39). TAKE ONE TEST - THREE CYLINDERS FOR EACH DAYS POUR OF 100 CUBIC YARDS, OR FRACTION THEREOF. TEST ONE CYLINDER AT 7 DAYS, TWO AT 28 DAYS. TEST CYLINDER SAMPLES SHALL BE TAKEN AT THE POINT OF DISCHARGE WHEN USING A PUMP.
    D) ONE COPY OF ALL TEST REPORTS SHALL BE SENT DIRECTLY TO THE OWNER, ENGINEER, ARCHITECT AND GENERAL CONTRACTOR.

29. CONTRACTOR SHALL PROVIDE FLATNESS AND LEVELNESS IN CONCRETE SLABS PER ACI 302.1R, FIG. 8.7 MINIMUM REQUIRED "F" NUMBERS FOR TYPE OF SLAB USE. REFER TO ACI 117 FOR FLOOR TOLERANCES.

30. REPAIR ANY CRACKS OR DEFECTIVE AREAS THAT WILL RESTORE THE AFFECTED SURFACE OR AREAS TO THEIR FULL DESIGN STRENGTH AND APPEARANCE. CONTACT THE STRUCTURAL ENGINEER FOR ADVICE AND EVALUATION.

31. ACCEPTANCE OF THE STRUCTURE WILL BE MADE IN CONFORMANCE WITH ACI 301.

32. ALL CAST-IN-PLACE CONCRETE MUST BE MAINTAINED WITH MINIMAL MOISTURE LOSS AT A RELATIVELY CONSTANT TEMPERATURE FOR A MINIMUM OF 7 DAYS FOLLOWING THE PLACING OF THE CONCRETE BY THE USE OF A WATER SPRAY, WATER SATURATED FABRIC, MOISTURE RETAINING MEMBRANE OR LIQUID CURING COMPOUND.

33. CURE SLABS-ON-GRADE FOR THE FIRST 72 HOURS BY THE USE OF:
    A) FOG SPRAYING
    B) PONDING
    C) SPRINKLING
    D) CONTINUOUSLY WET ABSORPTIVE MATS OR FABRIC
    E) CONTINUE CURING BY USE OF MOISTURE RETAINING COVER UNTIL CONCRETE HAS OBTAINED ITS SPECIFIED 28 DAY COMPRESSIVE STRENGTH.
    F) OR LIQUID CURING COMPOUND AFTER FINISHING PROCESS IS COMPLETED.
    G) CONCRETE WET CURE TIME TO BE 7 DAYS MINIMUM AT 50 DEGREES MINIMUM TEMPERATURE.

34. DO NOT USE MOISTURE RETAINING CURING COMPOUNDS FOR CURING SURFACES TO RECEIVE CARPET, FLEXIBLE FLOORING, CERAMIC TILED FLOORS OR OTHER SPECIFIED FLOOR SYSTEMS, UNLESS IT HAS BEEN DEMONSTRATED THAT SUCH COMPOUNDS WILL NOT PREVENT BOND.

35. DO NOT PERMIT CONCRETE NOT FULLY CURED TO BE EXPOSED TO EXCESSIVE TEMPERATURE CHANGES OR HIGH WINDS.

36. POUR ALL GROUND SLABS ON 10 MIL MINIMUM VAPOR RETARDER IN COMPLIANCE WITH ASTM E1745, LAPPED 6" MINIMUM AND FULLY TAPED.

37. EQUIPMENT MADE OF ALUMINUM OR ALUMINUM ALLOYS, SHALL NOT BE USED FOR PUMP LINES, TREMIES, OR CHUTES OTHER THAN SHORT CHUTES SUCH AS THOSE USED TO CONVEY CONCRETE FROM A TRUCK MIXER.

38. THE CODE PROHIBITS THE USE OF ALUMINUM (CONDUIT, PIPES, ETC.) IN STRUCTURAL CONCRETE UNLESS IT IS EFFECTIVELY COATED OR COVERED.

MASONRY

1. HOLLOW LOAD BEARING UNITS SHALL CONFORM TO ASTM C90, NORMAL WEIGHT, TYPE II. MINIMUM NET COMPRESSIVE UNIT STRENGTH = 2000 PSI. (NET AREA COMPRESSIVE MASONRY STRENGTH F'M = 2,000 PSI).

2. MORTAR SHALL BE TYPE S AND CONFORM TO ASTM C270 (PROPORTION OR PROPERTY SPECIFICATION).

3. COARSE GROUT SHALL CONFORM TO ASTM C476:
   A) 2500 PSI AT 28 DAYS.
   B) 1/4" MAXIMUM AGGREGATE.
   C) 8" - 11" SLUMP.

4. CODES AND STANDARDS:
   A) SPECIFICATIONS FOR MASONRY STRUCTURES - ACI 530.1/ASCE 6/ TMS 602 IS INCLUDED BY REFERENCE IN ITS ENTIRETY.
   B) BUILDING CODE REQUIREMENTS FOR MASONRY STRUCTURES - ACI 530/ ASCE 5/TMS 402.

5. A REINFORCED TIE BEAM SHALL BE PROVIDED IN ALL WALLS SHOWN ON THE STRUCTURAL DRAWINGS AT EACH FLOOR, THE ROOF, AND AT TOP OF ANY PARAPET WALL. USE GALVANIZED MESH-TYPE CELL CAPS. PROVIDE CORNER BARS AT ALL BEAM CORNERS TO MATCH HORIZONTAL BARS.

6. UNLESS NOTED OTHERWISE, TIE BEAMS SHALL BE AS FOLLOWS:
   A) FLOOR LEVELS: DOUBLE COURSE OF KNOCK-OUT BLOCKS WITH (1) #5 BAR IN EACH COURSE.
   B) ROOF LEVEL: DOUBLE COURSE OF KNOCK-OUT BLOCKS WITH (1) #5 IN EACH COURSE.

7. VERTICAL BARS SHALL BE HELD IN POSITION AT THE TOP AND BOTTOM OF BAR AND AT 32" O.C. MAXIMUM WITH A MINIMUM CLEARANCE OF 1/2" FROM MASONRY. THE CLEAR DISTANCE BETWEEN BARS SHALL NOT EXCEED ONE BAR DIAMETER, OR MORE THAN 1". CENTER BARS IN WALLS U.N.O.

8. VERTICAL REINFORCING SHALL BE AS SHOWN ON THE DRAWINGS. FILLCELLS WITH COARSE GROUT AS SPECIFIED. PROVIDE ACI 90 DEGREE STANDARD HOOKS INTO FOOTING AND ROOF TIE BEAM. LAP SPLICE VERTICAL REINFORCEMENT ABOVE FOOTING AND ABOVE EACH FLOOR LEVEL UNLESS NOTED OTHERWISE. MAINTAIN VERTICAL REINFORCING SHOWN ON PLANS ABOVE AND BELOW MASONRY OPENINGS. CONTINUE FOUNDATION DOWELS BELOW ALL MASONRY OPENINGS.

9. REINFORCED FILL CELLS ARE TO BE CLEAN AND FREE OF ANY FOREIGN MATERIAL OR DEBRIS. REMOVE ANY INSULATING MATERIAL FROM CELLS, INCLUDING POLYSTYRENE INSULATING INSERTS, PRIOR TO GROUT POUR.

10. REINFORCING BARS SHALL BE STRAIGHT EXCEPT FOR BENDS AROUND CORNERS AND WHERE BENDS OR HOOKS ARE DETAILED ON THE PLANS.

11. REINFORCING BARS SHALL BE LAPPED PER MASONRY LAP SCHEDULE MINIMUM (UNLESS OTHERWISE NOTED) WHERE SPLICED AND SHALL BE WIRED TOGETHER.

12. WHEN A FOUNDATION DOWEL DOES NOT LINE UP WITH A VERTICAL CORE, IT SHALL NOT BE SLOPED MORE THAN ONE HORIZONTAL IN SIX VERTICALS. DOWELS SHALL BE GROUTED INTO A CORE IN VERTICAL ALIGNMENT, EVEN THOUGH IT IS IN AN ADJACENT CELL TO THE VERTICAL WALL REINFORCEMENT.

13. PROVIDE HORIZONTAL WALL REINFORCING (9 GA.) HOT DIPPED GALVANIZED LADDER TYPE DUR-O-WALL (OR EQUIVALENT) AT 16" O.C. JOINT REINFORCING SHALL CONFORM TO ASTM A-951.

14. PROVIDE HORIZONTAL JOINT REINFORCEMENT AT DOORS AND WINDOWS FOR FIRST AND SECOND BLOCK COURSE ABOVE AND BELOW APERTURES. RUN REINFORCING CONTINUOUS OR EXTEND TWO FEET FROM APERTURE EDGE.

15. WIRE REINFORCEMENT SHALL BE LAPPED AT LEAST 6" AT SPLICES AND SHALL CONTAIN AT LEAST ONE CROSS WIRE OF EACH PIECE OF REINFORCEMENT IN THE LAPPED DISTANCE.

16. CLEANOUTS SHALL BE PROVIDED IN THE BOTTOM COURSE OF MASONRY IN EACH GROUT POUR WHEN THE POUR HEIGHT EXCEEDS 5'. CLEANOUTS TO BE SAW-CUT 4" X 4".

17. GROUT POUR HEIGHT SHALL NOT EXCEED 24'. PLACE GROUT IN 5' MAX. LIFTS HEIGHTS.

18. CONSOLIDATE GROUT POURS AT THE TIME OF PLACEMENT BY MECHANICAL MEANS AND RECONSOLIDATE AFTER INITIAL WATER LOSS AND SETTLEMENT.

19. ALL MASONRY FOUNDATION STEMWALLS AND RETAINING WALLS SHALL BE FULLY GROUTED.

20. STORE BLOCKS ON PALLETS AND COVER WITH PLASTIC SHEETING.

21. PLACE MASONRY IN RUNNING BOND WITH 3/8" MORTAR JOINTS. PROVIDE COMPLETE COVERAGE FACE SHELL MORTAR BEDDING, HORIZONTAL AND VERTICAL. FULLY MORTAR WEBS IN ALL COURSES OF PIERS, COLUMNS, AND PILASTERS AND ADJACENT TO GROUTED CELLS.

22. SEE DRAWINGS FOR MASONRY CONTROL JOINT LOCATIONS. SPACE AT 26'-0" O.C. AT EXTERIOR WALLS, 32'-0" O.C. AT INTERIOR WALLS UNLESS NOTED OTHERWISE.

23. SUBMITTALS:
    A) SUBMIT PROPOSED GROUT MIX DESIGN PRIOR TO CONSTRUCTION.
    B) SUBMIT PROPOSED MORTAR MIX DESIGN PRIOR TO CONSTRUCTION.
    C) SUBMIT DETAILED SHOP DRAWINGS OF REINFORCING BARS SHOWING NUMBER, SIZE, AND LOCATION. INCLUDE BAR LISTS AND BEND DIAGRAMS. INCLUDE ALL REQUIRED DIMENSIONS AND ELEVATIONS.
    D) SUBMIT COMPRESSIVE STRENGTH TESTS OF PROPOSED MASONRY UNITS PRIOR TO CONSTRUCTION. MASONRY UNITS ARE TO BE TESTED IN ACCORDANCE WITH ASTM C140.

24. A QUALIFIED TESTING LABORATORY SHALL BE RETAINED TO PERFORM THE FOLLOWING TESTS:
    A) SAMPLE AND TEST GROUT IN ACCORDANCE WITH ASTM C1019 FOR EACH 5000 SQ. FT. OF MASONRY.
    B) SLUMP TESTS - ASTM C143.
    C) MASONRY PRISM TEST IN ACCORDANCE WITH ASTM C1314. PROVIDE ONE SET OF 3 PRISMS PRIOR TO CONSTRUCTION AND DURING CONSTRUCTION FOR EACH 5000 SQ. FT. OF WALL.

25. PROVIDE 8" DEEP PRECAST REINFORCED CONCRETE LINTELS OVER ALL MASONRY OPENINGS NOT SHOWN TO HAVE A STRUCTURAL BEAM. MINIMUM END BEARING = 8". LINTEL WIDTH TO MATCH MASONRY WIDTH.

26. TOPS OF PARTIALLY CONSTRUCTED WALLS SHALL BE COVERED WITH VISQUEEN WHENEVER RAIN OCCURS AND AT THE END OF THE WORK DAY.

DRILL-IN BOLTS, SCREWS AND DOWELS

1. ADHESIVE DOWELING RODS/BOLTS SHALL BE CARBON STEEL THREADED ROD CONFORMING TO ISO 898 5.8 WITH A MINIMUM TENSILE STRENGTH OF 72.5 KSI (500MPa) AND A MINIMUM YIELD OF 58 KSI 400MPa). THREADED RODS WITH NUTS AND WASHERS INSTALLED IN ACCORDANCE WITH MANUFACTURER'S INSTRUCTIONS. PROVIDE HILTI HY 200 SAFE SET (ESR 3187) OR RE 500 SD (ESR 2322) ANCHORS BY HILTI OR EQUAL (SIMPSON SET-XP, ATC ULTRABOND 365CC).

2. ANCHORING ADHESIVE SHALL BE A TWO-COMPONENT SYSTEM SUPPLIED IN MANUFACTURER'S STANDARD SIDE-BY-SIDE FOIL PACKAGE AND DISPENSED THROUGH A STATIC-MIXING NOZZLE SUPPLIED BY THE MANUFACTURER. ADHESIVE SHALL BE TESTED AND APPROVED TO MEET THE MINIMUM REQUIREMENTS OF ACI 355.4 FOR CRACKED AND UNCRACKED CONCRETE RECOGNITION.

3. DRILL-IN REBAR DOWELS SHALL BE SET USING A TWO-PART ADHESIVE AS DESCRIBED ABOVE.

4. EXPANSION BOLTS SHALL BE HILTI KB TZ (ESR 1917) OR EQUAL. BOLT SHALL MEET DUCTILITY REQUIREMENTS OF ACI 318 SECTION D1.

5. EXPANSION BOLTS SHALL HAVE CARBON STEEL ANCHOR BODY AND NUT AND WASHER SHALL BE ELECTROPLATED ZINC COATING CONFORMING TO ASTM B633 TO A MINIMUM OF 5µM. THE STAINLESS STEEL ANCHOR BODY, NUT AND WASHER, AND EXPANSION SLEEVE SHALL CONFORM TO TYPE 316 STAINLESS STEEL. EXPANSION ANCHORS SHALL MEET THE MINIMUM REQUIREMENTS OF ACI 355.2 FOR CRACKED AND UNCRACKED CONCRETE. INSTALL IN ACCORDANCE WITH MANUFACTURER'S INSTRUCTIONS.

6. MASONRY SCREWS SHALL BE 1/4" DIAMETER WITH 1-5/8" MINIMUM EMBEDMENT INSTALLED IN DRILLED HOLES USING AN APPROPRIATE BIT DIAMETER.

7. SCREWS SHALL HAVE A BODY MADE OF CARBON STEEL AND SHALL BE HEAT TREATED AND SHALL HAVE 8µM ZINC COATING IN ACORDANCE WITH EN ISO 4042. PROVIDE HUS EZ (ESR 3027) SCREWS BY HILTI OR EQUAL.

8. HEAVY-DUTY CONCRETE AND MASONRY SCREWS SHALL BE TESTED AND APPROVED TO MEET THE MINIMUM REQUIREMENTS OF ACI 355.2. HILTI KWICK HUS EZ (ESR-3027 FOR CONCRETE, ESR-3056 FOR GROUT FILLED MASONRY). HEAVY DUTY SCREWS BY HILTI OR EQUAL.

9. THE CONTRACTOR SHALL ARRANGE FOR AN ANCHOR MANUFACTURER'S REPRESENTATIVE TO PROVIDE ONSITE INSTALLATION TRAINING FOR ALL OF THE ANCHORING PRODUCTS SPECIFIED. MCCARTHY AND ASSOCIATES TO RECEIVE DOCUMENTED CONFIRMATION THAT ALL OF THE CONTRACTOR'S PERSONNEL WHO ARE TO INSTALL ANCHORS ARE TRAINED PRIOR TO THE COMMENCEMENT OF INSTALLATION.

CARPENTRY

1. DIMENSIONED LUMBER SHALL BE DRESSED S4S, AND SHALL BEAR THE GRADE STAMP OF THE MANUFACTURER'S ASSOCIATION.

2. LUMBER SHALL BE SOUND, SEASONED, AND FREE FROM WARP.

3. LUMBER SHALL BE SOUTHERN PINE NO. 2 GRADE OR BETTER; WITH 19% MAXIMUM MOISTURE CONTENT, UNLESS NOTED OTHERWISE ON THE PLANS.

4. LUMBER IN CONTACT WITH MASONRY OR CONCRETE, OR EXPOSED TO WEATHER, SHALL BE PRESSURE TREATED.

5. MINIMUM COATING REQUIREMENTS FOR METAL CONNECTORS AND FASTENERS:
   A) INTERIOR - ZINC GALVANIZED (G90)
   B) EXTERIOR -GALVANIZED (G185) OR HOT DIP GALVANIZED (HDG)

6. WHEN USING STAINLESS STEEL CONNECTORS, USE STAINLESS STEEL FASTENERS. WHEN USING G185 OR HDG CONNECTORS, USE FASTENERS GALVANIZED PER ASTM A153.

7. PLYWOOD SHEATHING SHALL BE DFPA CD WITH EXTERIOR GLUE. ALL ROOF SHEATHING TO BE INSTALLED WITH PLYCLIPS.

8. INSTALL BRIDGING IN ALL FLOOR OR ROOF JOISTS AT 10'-0" O.C. MAXIMUM. INSTALL BLOCKING IN ALL WALL STUDS AT 4'-0^ ON CENTER TO COINCIDE WITH PLYWOOD JOINTS.

9. NAILING AND BOLTING SHALL COMPLY WITH AMERICAN INSTITUTE OF TIMBER CONSTRUCTION REQUIREMENTS.

10. CONNECTION HARDWARE SHALL BE SUPPLIED BY SIMPSON STRONG-TIE CO., INC, OR EQUIVALENT. SUBMIT CUT SHEETS OF ALTERNATIVE CONNECTION HARDWARE TO ENGINEER FOR APPROVAL.

11. STUDS SHALL BE DOUBLED AT ALL ANGLES, AROUND ALL OPENINGS, AND BELOW ALL BEAMS AND GIRDER TRUSSES UNLESS NOTED OTHERWISE. STUDS SHALL BE TRIPLED AT ALL CORNERS.

12. OUTSIDE CORNERS SHALL BE BRACED WITH A DIAGONAL 1 X 4 LET INTO OUTSIDE EDGE OF 2 X 4 STUDS, UNLESS PLYWOOD SHEATHING IS SHOWN ON DRAWINGS.

13. WOOD LINTELS OVER OPENINGS SHALL BE 2 X 6 HEADERS FOR SPANS UP TO 6'_0" AND 2 X 8 HEADERS FROM 6'_0" TO 7'_0". SEE PLANS FOR SPANS GREATER THAN 7'_0". ALSO PROVIDE 1/2" PLYWOOD SPACER PLATE BETWEEN BEAMS PLYS. FINISHED HEADER WIDTH SHALL MATCH WALL WIDTH. NAIL TOGETHER WITH 16D NAILS AT 12" ON CENTER TOP AND BOTTOM.

14. FLITCH BEAMS, WHERE SPECIFIED, SHALL BE BOLTED TOGETHER WITH ONE 3/4" DIAMETER BOLT TOP AND BOTTOM OVER SUPPORT OR AT END OF BEAM. INTERMEDIATE BOLTS TO BE SPACED AT 2'_0" O.C. TOP AND BOTTOM, STAGGERED FULL LENGTH OF BEAM (1/2" DIAMETER BOLTS). STEEL PLATES FOR FLITCH BEAMS SHALL CONFORM TO ASTM A_36.

15. PLACE A SINGLE PLATE AT THE BOTTOM AND A DOUBLE PLATE AT THE TOP OF ALL LOAD-BEARING STUD WALLS. 2X SOLE PLATES AT THE EDGES OF SLABS SHALL BE ATTACHED TO THE SLAB WITH SIMPSON MAS MUDSILL ANCHORS (WITH 6 10D NAILS) AT 2'-8" O.C. AT INTERIOR STUD WALLS, PROVIDE EITHER HILTI DN72 (WITH 7/8" DIAMETER 5/64" THICK WASHERS) POWDER DRIVEN FASTENERS AT 0'-10" ON CENTER, OR 1/2" DIAMETER HILTI KWIK-BOLTS (EXPANSION ANCHORS(WITH 6" EMBEDMENT, AT 4'-0" O.C. RED-HEAD FASTENERS OF EQUIVALENT SIZES MAY BE USED. ALL OTHER SUBSTITUTIONS MUST BE APPROVED BY MCCARTHY AND ASSOCIATES, INC. PRIOR TO INSTALLATION. SEE THE SHEAR WALL SCHEDULE FOR SPECIAL SOLE PLATE ATTACHMENT AT SHEAR WALLS.

16. WALL SHEATHING SHALL BE: (SEE SHEAR WALL SCHEDULE FOR REQUIREMENTS AT SHEAR WALLS)
    A) AT INTERIOR WALLS PROVIDE 1/2" OR 4/8" GYPSUM WALLBOARD. (SEE ARCHITECTURAL DRAWINGS FOR LOCATIONS) EACH SIDE OF STUDS, NAILED WITH 5D COOLER NAILS AT 7" O.C. (USE 6D COOLER NAILS FOR 5/8" WALLBOARD) AT ALL SUPPORTS. PROVIDE SOLID 2X BLOCKING AT ALL SHEET EDGES. BLOCKING IS NOT REQUIRED AT NON-LOAD BEARING PARTITIONS.
    B) AT EXTERIOR WALLS SHEATH THE INTERIOR FACE OF WALLS WITH GYPSUM WALLBOARD AS NOTED ABOVE FOR INTERIOR WALLS. SHEATH THE EXTERIOR FACE OF WALLS WITH 5/8" C-DX PLYWOOD NAILED WITH 10D NAILS AT 6" ON CENTER AT EDGES AND AT 12" O.C. AT ALL INTERMEDIATE SUPPORTS. PROVIDE SOLID DOUBLE 2X BLOCKING AT ALL SHEET EDGES. BLOCKING IS NOT REQUIRED AT NON-LOAD BEARING PARTITIONS.

17. FLOOR SHEATHING IS 3/4" TONGUE AND GROOVE PLYWOOD, GLUED AND NAILED WITH 10D NAILS AT 6" O.C. AT SUPPORTED EDGES, AND 10D NAILS AT 12" O.C. AT INTERMEDIATE SUPPORTS. DO NOT USE OSB FLOORING.

18. ROOF SHEATHING SHALL BE 5/8" EXTERIOR GRADE PLYWOOD OR OSB NAILED WITH 10D NAILS AT 4" O.C. AT SUPPORTED EDGES, AND 10D NAILS AT 6" O.C. AT INTERMEDIATE SUPPORTS. PROVIDE ONE PLYWOOD CLIP PER SPAN BETWEEN SHEET EDGES. PROVIDE SOLID 2X BLOCKING BETWEEN SUPPORTS AT ALL HIPS, RIDGES, VALLEYS, AND CHANGES IN ROOF SLOPE. USE RING SHANK NAILS WHERE MEAN ROOF HEIGHT EXCEEDS 25'-0".

19. NAILING SCHEDULE

CONNECTION	COMMON NAIL	NUMBER OR SPACING
SOLE PLATE TO TRUSS OR BLOCKING	16D	16" O.C.
STUD TO SOLE PLATE, TOE NAIL	8D	4
DOUBLE STUDS, FACE NAIL	10D	24" O.C.
DOUBLE TOP PLATES, FACE NAIL	10D	16" O.C.
TOP PLATES LAPS AND INTERSECTIONS	10D	3
TRUSSES, LAPS OVER WALLS, FACE NAIL	16D	4
BUILT-UP CORNER STUDS	16D	24" O.C.
STUDS TO SOLE PLATE, END NAIL	16D	2

20. FASTENER SUBSTITUTIONS
    ALL NAILS ARE COMMON NAILS, UNLESS NOTED OTHERWISE. THE FOLLOWING FASTENERS ARE ACCEPTABLE SUBSTITUTIONS. ALL ALTERNATE FASTENERS SHALL BE SPACED AT THE SAME SPACING AS THE SCHEDULED FASTENERS.

SCHEDULED FASTENER	ALTERNATE FASTENER
8D COMMON NAIL	8D RING SHANK NAIL
	8D SCREW SHANK NAIL
	0.131 P-NAIL
10D COMMON NAIL	10D RING SHANK NAIL
	10D SCREW SHANK NAIL
	0.148 P-NAIL
6D COOLER NAIL	#6 X 1-1/4" TYPE S OR W DRYWALL SCREW

21. GUN DRIVEN NAILS MUST BE SUBMITTED FOR REVIEW WITH APPROPRIATE BACK-UP DATA.

22. OSB SHALL NOT HAVE A MOISTURE CONTENT GREATER THAN 15%. PROLONGED EXPOSURE TO WETTING & MOISTURE WILL DAMAGE AND REDUCE THE STRUCTURAL CAPACITY OF THE SHEATHING. SPECIAL CARE SHALL BE TAKEN DURING CONSTRUCTION TO KEEP THE OSB DRY AT ALL TIMES (INCLUDING DURING TRANSPORTATION, STORAGE, INSTALLATION, ETC.)

PRE-ENGINEERED WOOD TRUSSES

1. THIS SECTION DEFINES PRE-ENGINEERED, PREFABRICATED, METAL PLATE CONNECTED WOOD ROOF TRUSSES AS "WOOD TRUSSES".

2. WOOD TRUSSES SHALL BE DESIGNED AND FABRICATED IN ACCORDANCE WITH THE "NATIONAL DESIGN SPECIFICATION FOR WOOD CONSTRUCTION", PUBLISHED BY THE AMERICAN FOREST AND PAPER ASSOCIATION, "NATIONAL DESIGN STANDARD FOR METAL PLATE CONNECTED WOOD TRUSS CONSTRUCTION", PUBLISHED BY THE TRUSS PLATE INSTITUTE, TPI 1.

3. THE WOOD TRUSS MANUFACTURER MUST PARTICIPATE IN A CODE APPROVED THIRD PARTY QUALITY ASSURANCE PROGRAM SUCH AS THE TRUSS PLATE INSTITUTE'S "QUALITY CONTROL INSPECTION PROGRAM" OR EQUIVALENT.

△	revision	by
△		
△		
△		
△		
△		
△		

SIXTEENTH SQUARE - BUILDING 1
1523 DR. MARTIN LUTHER KING JR. ST. S. ST. PETERSBURG, FL 33705

klar and klar
architects + interior designers
www.klarklar.com
28473 us 19 n
suite 602
clearwater, fl 33761
727-799-5420
American Institute of Architects member firm
☐ Roberta S. Klar
☒ Steven L. Klar
AA 0002321

☐ Preliminary
☒ Permitting Set
☒ Construction Set

Date: 12/15/20
Drawn: SK/EP
Sheet: A0.3A
Of:

Copyright 2020. All rights reserved—no part of this document may be reproduced in any form without permission of Klar and Klar Architects, inc.

STRUCTURAL NOTES CONT'D.:

4. WOOD TRUSSES SHALL BE DESIGNED FOR THE LOAD CRITERIA PROVIDED ON THE STRUCTURAL DRAWINGS. MINIMUM BOTTOM CHORD DEAD LOAD = 10 PSF.

5. DURATION OF LOAD FACTORS:
   ROOF 0.6DL+0.6WL 1.33
   ROOF DL+LL 1.25
   FLOOR DL+LL 1.00

6. THE WOOD TRUSS SYSTEM SHALL BE DESIGNED BY THE DELEGATED SYSTEM ENGINEER WHO SHALL PREPARE DESIGN CALCULATIONS AND SUPERVISE THE PREPARATION OF SHOP DRAWINGS INCLUDING, BUT NOT LIMITED TO:
   A) TRUSS PLACEMENT PLAN SHOWING ALL TRUSSES, GIRDERS, AND OVER-BUILD TRUSS FRAMING.
   B) TRUSS TO TRUSS METAL CONNECTORS WITH MODEL NUMBER AND MANUFACTURER.
   C) DIMENSIONED LOCATION OF ALL TRUSSES.
   D) TRUSS BRACING.
   E) DESIGNATION OF EACH TRUSS REFERENCED TO THE TRUSS DESIGN CALCULATIONS.

7. INDIVIDUAL TRUSSES SHALL BE DESIGNED BY THE DELEGATED SYSTEM ENGINEER INCLUDING:
   A) DIMENSIONED TRUSS ELEVATION OF EACH INDIVIDUAL TRUSS WITH CHORDS AND WEBS, REFERENCED TO THE TRUSS SYSTEM DRAWINGS.
   B) TRUSS SPACING.
   C) DESIGN LOADS CRITERIA AND LOAD COMBINATIONS.
   D) LOAD DURATION FACTORS, CONDITION OF USE FACTORS AND ANY LIVE LOAD REDUCTIONS TAKEN.
   E) APPLICABLE CODES USED.
   F) WOOD SPECIES, GRADE, AND MOISTURE CONTENT.
   G) METAL CONNECTOR PLATES TYPE, SIZE, GAUGE, ETC.
   H) SUPPORT REACTIONS AND MINIMUM BEARING LENGTH.
   I) DEFLECTIONS.
   J) PERMANENT CONTINUOUS TRUSS TO TRUSS BRACING.
   K) INDIVIDUAL MEMBER STIFFENERS.
   L) TRUSS SPLICE DETAILS, INCLUDING PIGGY BACK TRUSSES.
   M) IDENTIFICATION OF ANY COMPUTER PROGRAM USED.

8. DEFLECTION LIMITATIONS: (UNLESS NOTED OTHERWISE)
   A) ROOF LIVE LOAD = L/360
   B) ROOF TOTAL LOAD = L/240

9. FIRE RETARDANT WOOD IS NOT ALLOWABLE.

10. SUPPORTS: WOOD TRUSSES SHALL BE DESIGNED WITH AT LEAST ONE HORIZONTAL ROLLER CONNECTION PER SPAN SO THAT NO HORIZONTAL REACTIONS ARE INDUCED ON SUPPORTS UNDER DEAD OR LIVE LOADS.

11. REFER TO THE ARCHITECTURAL DRAWINGS. IF A CEILING OR ADEQUATE FURRING STRIPS ARE NOT PROVIDED, TRUSS BOTTOM CHORDS MUST BE DESIGNED AS LATERALLY UNBRACED.

12. TRUSS ERECTOR IS RESPONSIBLE FOR ALL TEMPORARY BRACING OF TRUSS SYSTEM DURING CONSTRUCTION.

13. HANDLING, INSTALLATION, AND BRACING OF WOOD TRUSSES SHALL BE IN ACCORDANCE WITH TPI/WTCA BCSI.

14. ALL TRUSS TO TRUSS AND TRUSS TO SUPPORT CONNECTIONS SHALL BE DESIGNED BY THE DELEGATED ENGINEER.

15. CONNECTION HARDWARE SHALL BE SUPPLIED BY SIMPSON STRONG-TIE CO., INC, OR BY APPROVED EQUIVALENT MANUFACTURER. CONNECTION HARDWARE IS TO BE FULLY FASTENED PER MANUFACTURER'S REQUIREMENTS.

16. MINIMUM COATING REQUIREMENTS FOR METAL CONNECTORS, TRUSS PLATES, AND FASTENERS:
   A) INTERIOR -ZINC GALVANIZED (G40)
   B) EXTERIOR -GALVANIZED (G185) OR HOT DIP GALVANIZED (HDG)
   C) EXTERIOR COASTAL AREAS -STAINLESS STEEL (TYPE 316L)

17. PILING OF PLYWOOD ON WOOD TRUSSES IS NOT ALLOWED.

18. INSTALLATION OF BROKEN, DAMAGED, WARPED, OR IMPROPERLY REPAIRED WOOD TRUSSES IS NOT ALLOWED.

19. IMPROPER OR UNAUTHORIZED FIELD ALTERATIONS OF WOOD TRUSSES IS NOT ALLOWED.

20. CONNECTIONS AND BRACING MUST BE INSTALLED BEFORE LOADING SHEATHING ON THE TRUSSES.

21. WOOD TRUSSES THAT DO NOT MEET INTERIOR LOAD BEARING WALLS MUST BE SHIMMED. DO NOT PULL WOOD TRUSSES DOWN TO INTERIOR BEARINGS.

22. WOOD TRUSS DELEGATED ENGINEER MUST BE PROVIDED WITH A COPY OF THESE DRAWINGS AND SPECIFICATIONS.

23. SUBMITTALS SHALL HAVE A COVER SHEET CONTAINING THE NAME, ADDRESS, AND LICENSE NUMBER OF DELEGATED ENGINEER, PROJECT IDENTIFICATION INFORMATION, AND AN INDEX OF ATTACHED DRAWINGS. ALL SUBMITTED CALCULATIONS AND SHOP DRAWINGS SHALL BEAR THE SEAL OF THE DELEGATED ENGINEER.

24. INCOMPLETE SUBMITTALS AND SUBMITTALS THAT ARE NOT SIGNED AND SEALED WILL BE RETURNED WITHOUT REVIEW.

MANUFACTURED LUMBER

1. MATERIAL, MANUFACTURE AND QUALITY CONTROL SHALL BE IN CONFORMANCE WITH THE CABO REPORT NO. NER-401.

2. VENEERS SHALL BE DOUGLAS FIR OR SOUTHERN PINE OF THICKNESSES APPROVED BY THE BUILDING CODE. THEY SHALL BE ULTRASONICALLY GRADED OR GRADED BY OTHER ADVANCED GRADING SYSTEM APPROVED BY THE CODE.

3. ADHESIVES SHALL BE OF THE WATERPROOF TYPE CONFORMING TO THE REQUIREMENTS OF ASTM D-2559.

4. MINIMUM ALLOWABLE STRESS VALUES:
   A) MICROLLAM LVL BEAM GRADE
      FB = 2600 PSI
      FV = 285 PSI
      FC⊥ = 2510 PSI
      E = 1,900,000 PSI
   B) 1.9E PARALLAM PSL BEAM GRADE 2.0E
      FB = 2900 PSI
      FV = 290 PSI
      FC⊥ = 2400 PSI
      E = 2,000,000 PSI
   C) GANGLAM LVL STUDS
      FB = 3100 PSI
      FV = 290 PSI
      FC⊥ = 3200 PSI
      E = 2,000,000 PSI

5. PROVIDE WRITTEN CERTIFICATION THAT MEMBERS CONFORM TO THE REQUIRED SPECIFICATIONS.

6. MEMBERS SHALL BE USED UNDER DRY CONDITIONS AND SHALL NOT BE INSTALLED WHERE THE MAXIMUM MOISTURE CONTENT EXCEEDS 18%.

7. MEMBERS SHALL BE IN ACCORDANCE WITH DESIGN SPECIFICATIONS OF THE AMERICAN INSTITUTE OF TIMBER CONSTRUCTION.

8. SUBMITTALS: ALL SUBMITTALS SHALL BEAR THE EMBOSSED SEAL OF A LICENSED DELEGATED ENGINEER AND SHALL BE SUBMITTED FOR REVIEW BY THE ARCHITECT/ENGINEER PRIOR TO FABRICATION.

9. SUBMITTALS TO INCLUDE:
   A) ERECTION PLAN.
   B) MEMBER AND CONNECTION DETAILS.
   C) TEMPORARY SHORING PLAN, IF REQUIRED.

10. GANGLAM L.V.L. STUDS MAY BE USED AS AN ALTERNATIVE TO CONVENTIONAL WOOD STUDS AS SHOWN ON PLANS. SUBMITTALS MUST INCLUDE SIGNED AND SEALED CALCULATIONS IN ADDITION TO THE ABOVE REQUIREMENTS.

GSI STRUCTURAL INSULATED PANEL SYSTEM

1. SIPS PANEL SYSTEM SHALL BE MANUFACTURED BY GRAMATICA SIPS INTERNATIONSL (GSI). WWW.GRAMITICASIPS.COM.

2. THE PANELS SHALL BE PRE-CUT, PRE-DRILLED AND SEQUENTIALLY NUMBERED FOR INSTALLATION.

3. THE PANELS SHALL PROVIDE A CONTINUOUS LOAD PATH FROM THE FOUNDATION TO THE ROOF.

4. GSI'S PANELS SHALL BE BUILT WITH FLAME RESISTANT FIBER CEMENT OR TITAN XL.

5. PANELS SHALL BE CONSTRUCTED WITH EXPANDED POLYSTYRENE IN THE PANEL CORE.

6. PANEL INSTALLERS MUST BE TRAINED BY GSI'S TECHNICAL DIRECTOR AND APPROVED BY GSI.

7. SIPS PANELS AND ALL CONNECTIONS SHALL BE DESIGNED BY THE MANUFACTURER'S DELEGATED ENGINEER.

8. SUBMITTALS: ALL SUBMITTALS SHALL BEAR THE SEAL OF A LICENSED DELEGATED ENGINEER AND SHALL BE SUBMITTED FOR REVIEW BY THE ARCHITECT/ENGINEER PRIOR TO FABRICATION.

9. SUBMITTALS TO INCLUDE:
   A) ERECTION PLAN.
   B) MEMBER AND CONNECTION DETAILS.
   C) TEMPORARY SHORING PLAN, IF REQUIRED.

10. WALL PANEL SPINES ARE TO BE DOUBLE 7/16 X 4A UNLESS NOTED OTHERWIDE (U.N.O.).

11. ROOF PANEL SPINES ARE TO BE TWO 2X SPF.

12. ALL ROUGH OPENINGS TO BE LINED WITH 2X LUMBER (TYP) UNLESS NOTED OTHERWISE (U.N.O.)

13. CONTRACTOR IS RESPONSIBLE FOR VERIFYING ALL PANEL SIZES, DIMENSIONS, AND CUT-OUTS PRIOR TO INSTALLATION.

14. CONTRACTOR TO DOUBLE CHECK ALL (MARKED AND UNMARKED) DIMENSIONS, SIZES AND CUT-OUTS PRIOR TO INSTALLATION.

15. CHECK WITH THE MANUFACTURER BEFORE MODIFYING PANELS.

16. THE SIPS PANEL SYSTEM IS THE BUILDINGS MAIN WIND FORCE RESISTING SYSTEMS (MWFRS) FOR LATERAL LOADS. THE DELEGATED ENGINEER SHALL ACCOUNT FOR ALL VERTICAL GRAVITY LOADS AND HORIZONTAL WIND LOADS.

VERTICAL REINFORCEMENT BAR LAP SCHEDULE (60 KSI)

BAR SIZE	CLASS "B" TENSION LAP		
	3,000 PSI	4,000 PSI	5,000 PSI
# 5	36"	31"	28"
# 6	43"	37"	33"
# 7	63"	54"	49"
# 8	72"	62"	55"
# 9	81"	70"	63"
# 10	91"	79"	70"

NOTES:
1. BASED ON NORMAL WEIGHT CONCRETE & GRADE 60 REINFORCING BARS.

2 / A0.3B VERT. REINFORCEMENT BAR
LAP SCHEDULE - CONCRETE

MASONRY REINF. LAP SCHEDULE

BAR SIZE	LAP LENGTH
#3 BAR	20"
#4 BAR	26"
#5 BAR	32"
#6 BAR	43"
#7 BAR	60"

NOTE:
1. LAPS BASED ON 48 BAR DIAMETERS
2. BAR STRESSES DO NOT EXCEED 80%

2 / A0.3B VERT. REINFORCEMENT BAR
LAP SCHEDULE - MASONRY

ULTIMATE WIND PRESSURES (PSF)
EXTERIOR DOORS, WINDOWS, WALLS

EFFECTIVE AREA (SQ. FT)	ZONE 4				ZONE 5			
	PRESSURE (PSF)		SUCTION (PSF)		PRESSURE (PSF)		SUCTION (PSF)	
	ULT.	ASD.	ULT.	ASD.	ULT.	ASD.	ULT.	ASD.
1-20	49.4	29.6	-53.6	-32.1	49.4	29.6	-66.2	-39.7
21-50	46.9	28.1	-51.1	-30.6	46.9	28.1	-61.6	-36.9
51-100	44.4	26.6	-48.6	-29.1	44.4	26.6	-55.7	-33.4
101-150	41.9	25.1	-46.1	-27.6	41.9	25.1	-51.5	-30.9
151-250	40.6	24.3	44.8	-26.8	40.6	24.3	-48.6	-29.1
251-500	39.0	23.4	-43.2	-25.9	39.0	23.4	-45.7	-27.4
501 + ABV.	36.9	22.1	-41.1	-24.6	36.9	22.1	-41.1	-24.6

ULTIMATE GROSS WIND LOADS MAIN ROOF
ROOFING MATERIALS

COMPONENT & CLADDING	ROOF ZONE					
	1		2		3	
	ULT.	ASD.	ULT.	ASD.	ULT.	ASD.
PRESSURE (PSF)	24.3	14.5	24.3	14.5	24.3	14.5
SUCTION (PSF)	-62.0	-37.2	-74.6	-44.7	-129.1	-77.4

ULTIMATE GROSS WIND LOADS MAIN ROOF OVERHANGS AND CANOPIES
ROOFING MATERIALS

COMPONENT & CLADDING	ROOF ZONE					
	1		2		3	
	ULT.	ASD.	ULT.	ASD.	ULT.	ASD.
PRESSURE (PSF)	24.3	14.5	24.3	14.5	24.3	14.5
SUCTION (PSF)	-62.0	-37.2	-74.6	-44.7	-129.1	-77.4

ULTIMATE GROSS WIND LOADS MAIN ROOF
SIPS PANELS

COMPONENT & CLADDING	ROOF ZONE					
	1		2		3	
	ULT.	ASD.	ULT.	ASD.	ULT.	ASD.
PRESSURE (PSF)	20.5	12.3	20.5	12.3	20.5	12.3
SUCTION (PSF)	-54.5	-32.7	-54.5	-35.7	-45.5	-57.3

ULTIMATE GROSS WIND LOADS OVERHANGS AND CANOPIES
SIPS PANELS

COMPONENT & CLADDING	ROOF ZONE					
	1		2		3	
	ULT.	ASD.	ULT.	ASD.	ULT.	ASD.
PRESSURE (PSF)	20.5	12.3	20.5	12.3	20.5	12.3
SUCTION (PSF)	-96.4	-57.8	-101.4	-60.8	-137.4	-82.4

NOTES:
1. TO COMPLY WITH THE (ASCE 7-10), ULTIMATE WIND PRESSURES IN THE TABLES ABOVE ARE CONVERTED TO (ASD) WIND PRESSURES, EACH VALUE WAS MULTIPLIED BY (0.6).
2. FLORIDA PRODUCT APPROVALS AND NOTICES OF ACCEPTANCE ARE SHOWN IN ASD.

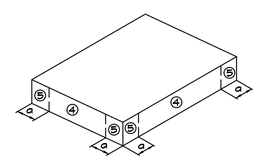

DOORS, WINDOWS AND WALLS

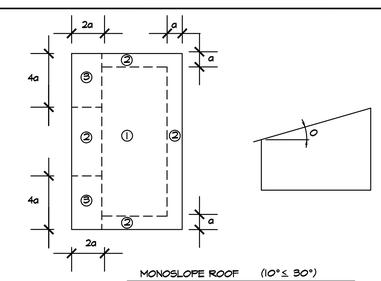

MONOSLOPE ROOF (10° ≤ 30°)

COMPONENT AND CLADDING LOADING DIAGRAMS

1. a=4.0'
2. THIS BUILDING IS DESIGNED AS AN ENCLOSED STRUCTURE. ALL EXTERIOR COMPONENTS (DOORS, WINDOWS, ETC.) MUST BE DESIGNED TO WITHSTAND THE WIND LOADINGS SPECIFIED FOR THE DESIGN OF COMPONENTS AND CLADDING IN THE TABLES. IN ADDITION, ALL AREAS OF EXTERIOR GLAZING MUST BE CERTIFIED FOR MISSILE IMPACT OR PROTECTED BY WIND-BORNE DEBRIS BY A SCREEN BARRIER.

	revision	by
△		
△		
△		
△		
△		
△		

SIXTEENTH SQUARE - BUILDING I
1523 DR. MARTIN LUTHER KING JR. ST. S. ST. PETERSBURG, FL 33705

klar and klar
architects + interior designers
www.klarklar.com
28473 us 19 n
suite 602
clearwater, fl 33761
727-799-5420
American Institute of Architects member firm
☐ Roberta S. Klar
☒ Steven L. Klar
AA 0002321

☐ Preliminary
☒ Permitting Set
☒ Construction Set

Date: 12/15/20
Drawn: SK/EP
Sheet: A0.3B
Of:

Copyright 2020. All rights reserved-no part of this document may be reproduced in any form without permission of klar and klar Architects, inc.

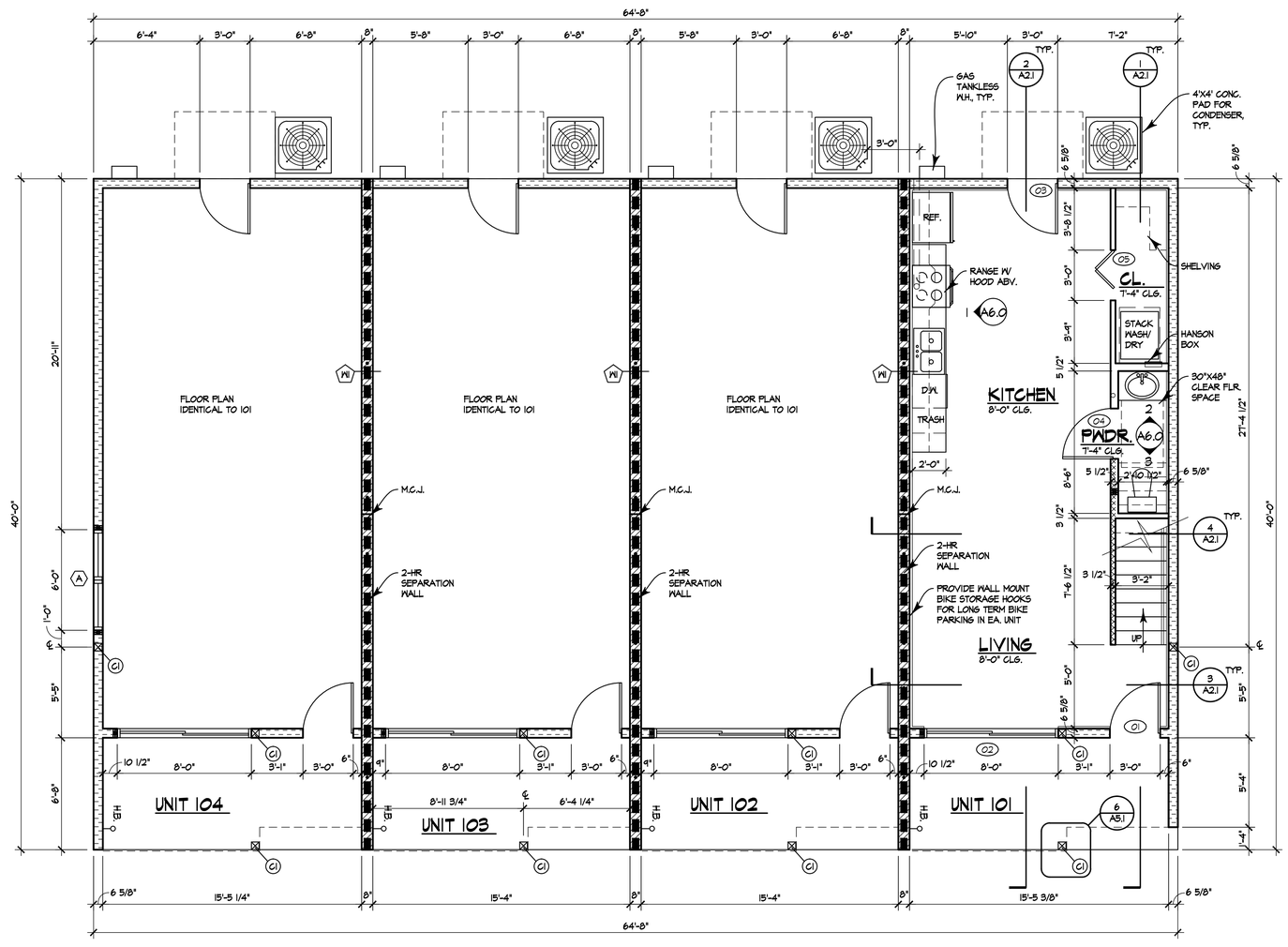

NORTH

1 A1.0 BLDG. 1 - TYPICAL FIRST FLOOR PLAN

1/4" = 1'-0"

	revision	by
△		
△		
△		
△		
△		
△		

SIXTEENTH SQUARE - BUILDING 1

1523 DR. MARTIN LUTHER KING JR. ST. S. ST. PETERSBURG, FL 33705

klar and klar architects + interior designers

www.klarklar.com

28473 us 19 n
suite 602
clearwater, fl 33761
727-799-5420

American Institute of Architects member firm

☐ Roberta S. Klar

☒ Steven L. Klar

AA 0002321

☐ Preliminary

☒ Permitting Set

☒ Construction Set

Date: 12/15/20

Drawn: SK/EP

Sheet: A1.0

Of:

Copyright 2020. All rights reserved-no part of this document may be reproduced in any form without permission of klar and klar Architects, inc.

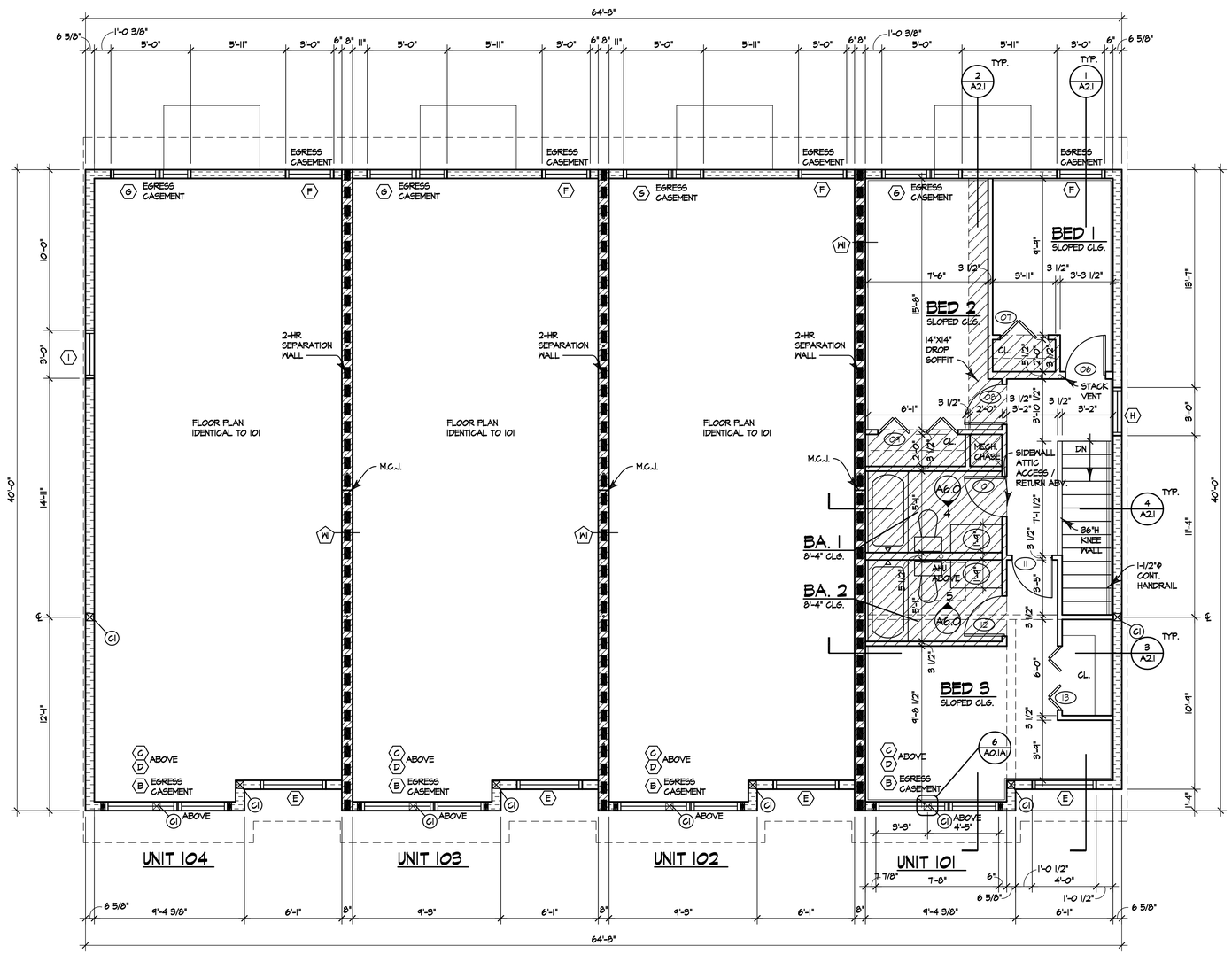

NORTH

1 / A1.1 BLDG. 1 - SECOND FLOOR PLAN

1/4" = 1'-0"

HATCHED AREA INDICATES DROPPED CEILING FOR HVAC.

	revision	by
△		
△		
△		
△		
△		
△		

SIXTEENTH SQUARE - BUILDING 1

1523 DR. MARTIN LUTHER KING JR. ST. S. ST. PETERSBURG, FL 33705

klar and klar
architects + interior designers

www.klarklar.com

28473 us 19 n
suite 602
clearwater, fl 33761
727-799-5420

American Institute of Architects member firm

☐ Roberta S. Klar
☒ Steven L. Klar

AA 0002321

☐ Preliminary
☒ Permitting Set
☒ Construction Set

Date: 12/15/20

Drawn: SK/EP

Sheet: A1.1

Of:

Copyright 2020. All rights reserved-no part of this document may be reproduced in any form without permission of Klar and Klar Architects, Inc.

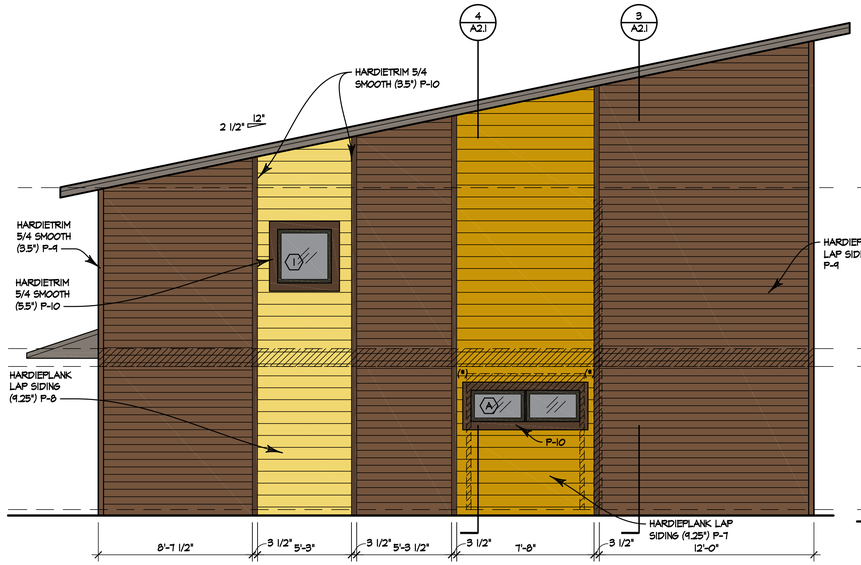

4 A2.0 TYPICAL LEFT ELEVATION
1/4" = 1'-0"

3 A2.0 REAR ELEVATION
1/4" = 1'-0"

NOTES:

HATCHING INDICATES OPENING HEADER, JAMBS, FLOOR JOISTS, & BEAMS DESIGNED BY ARCHITECT. EVERYTHING ELSE DESIGNED BY SIPS DELEGATED ENGINEER

BOXED NUMBER INDICATES METAL CONNECTOR BY SIMPSON

(*) ASTERISK INDICATES DELEGATED SIPS ENGINEER SHALL DESIGN PANELS TO TRANSFER JAMB / COLUMN LOADS UP OR DOWN TO SHEAR DIAPHRAGM UNDER LATERAL LOADS INCLUDING CONNECTION TO DIAPHRAGM.

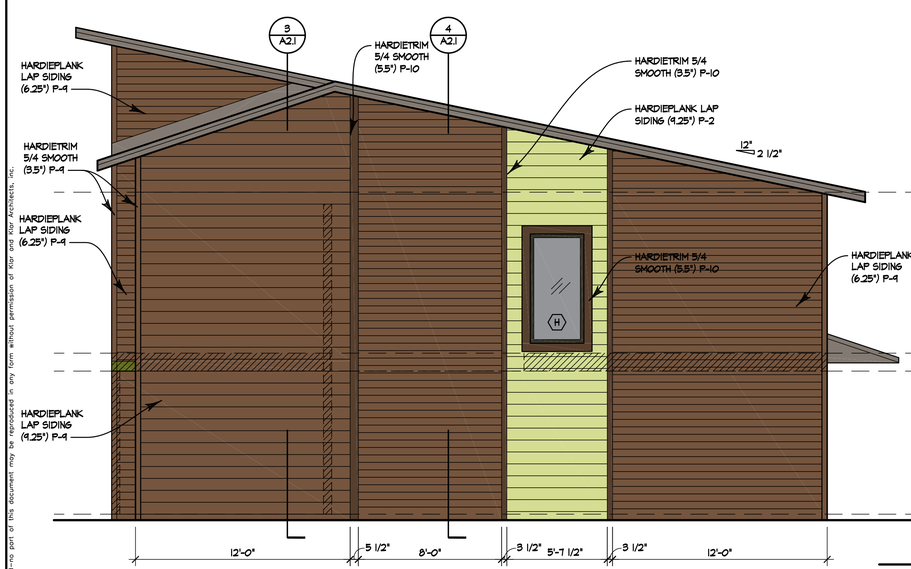

2 A2.0 TYPICAL RIGHT ELEVATION
1/4" = 1'-0"

1 A2.0 FRONT ELEVATION
1/4" = 1'-0"

	revision	by
1	1/20/21 BLDG. REVIEW	EP

SIXTEENTH SQUARE - BUILDING 1

1523 DR. MARTIN LUTHER KING JR. ST. S. ST. PETERSBURG, FL 33705

klar and klar
architects + interior designers

www.klarklar.com

28473 us 19 n
suite 602
clearwater, fl 33761
727-799-5420

American Institute of Architects member firm

☐ Roberta S. Klar
☒ Steven L. Klar

AA 0002321

☐ Preliminary
☒ Permitting Set
☒ Construction Set

Date: 12/15/20

Drawn: SK/EP

Sheet: A2.0

Of:

Copyright 2020. All rights reserved-no part of this document may be reproduced in any form without permission of Klar and Klar Architects, Inc.

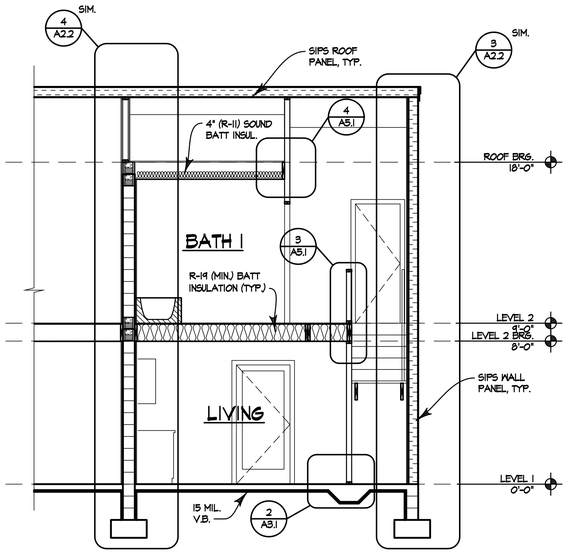

4 A2.1 BLDG. SECTION
1/4" = 1'-0"

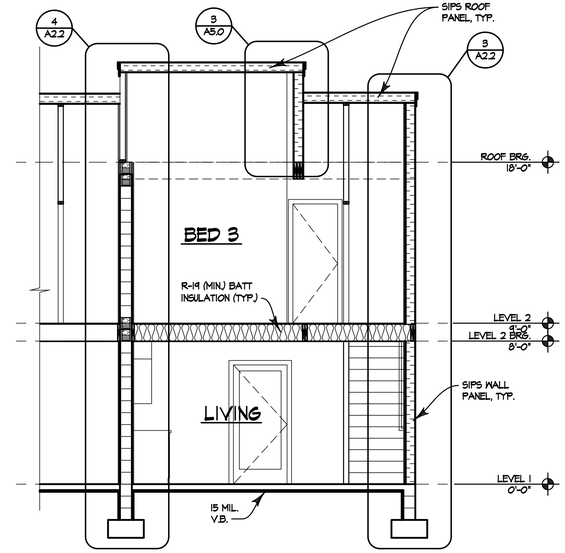

3 A2.1 BLDG. SECTION
1/4" = 1'-0"

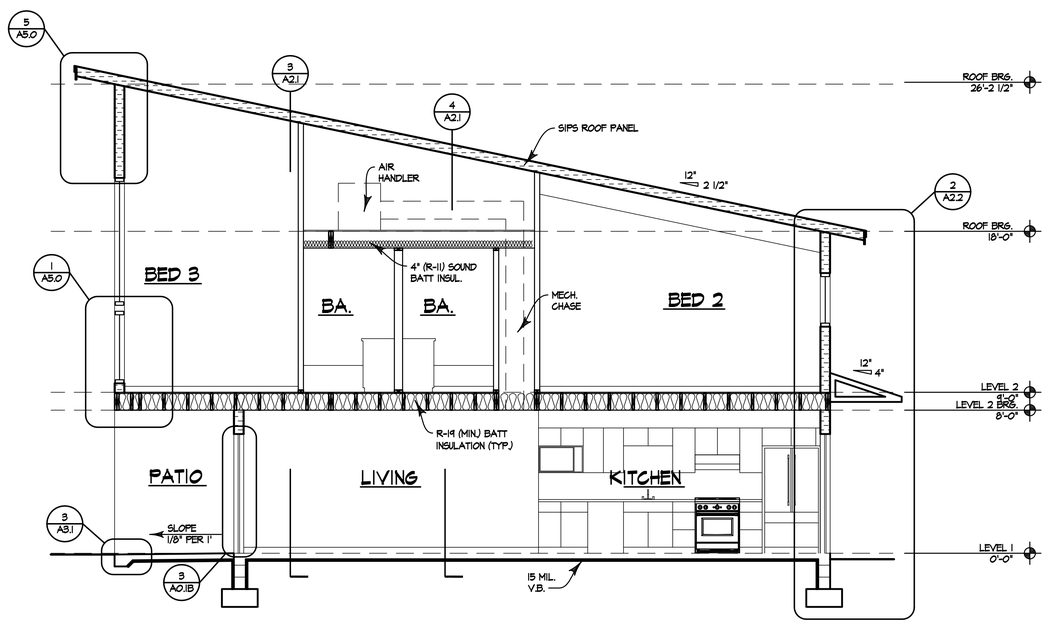

2 A2.1 BLDG. SECTION
1/4" = 1'-0"

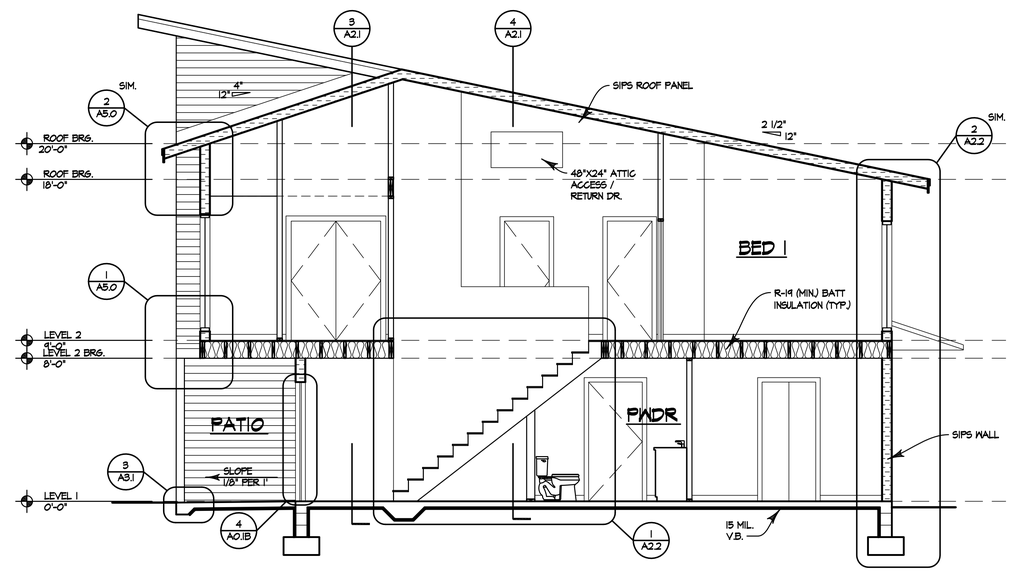

1 A2.1 BLDG. SECTION
1/4" = 1'-0"

	revision	by
△		
△		
△		
△		
△		
△		

SIXTEENTH SQUARE - BUILDING 1

1523 DR. MARTIN LUTHER KING JR. ST. S. ST. PETERSBURG, FL 33705

klar and klar
architects + interior designers

www.klarklar.com

28473 us 19 n
suite 602
clearwater, fl 33761
727-799-5420

American Institute of Architects member firm

☐ Roberta S. Klar
☒ Steven L. Klar

AA 0002321

☐ Preliminary
☒ Permitting Set
☒ Construction Set

Date: 12/15/20

Drawn: SK/EP

Sheet: A2.1

Of:

Copyright 2020. All rights reserved-no part of this document may be reproduced in any form without permission of Klar and Klar Architects, Inc.

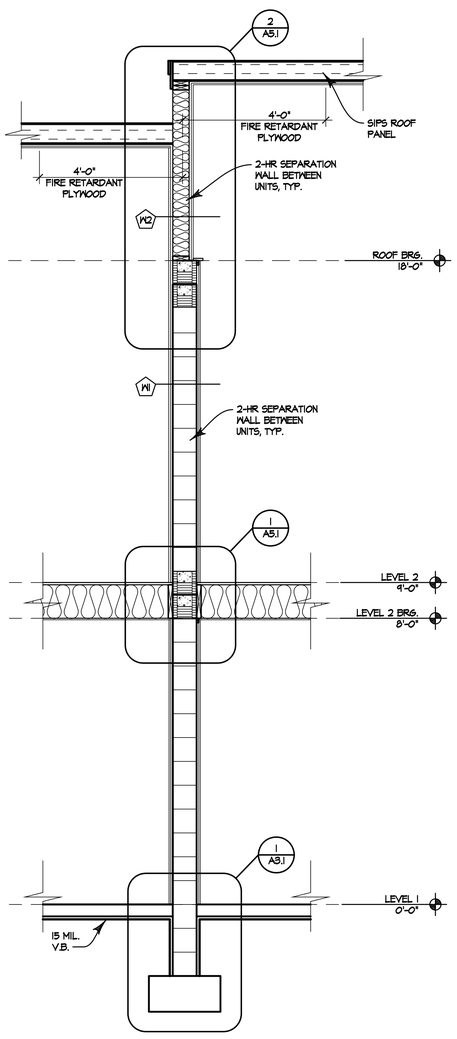

4 A2.2 BLDG. SECTION
1/2" = 1'-0"

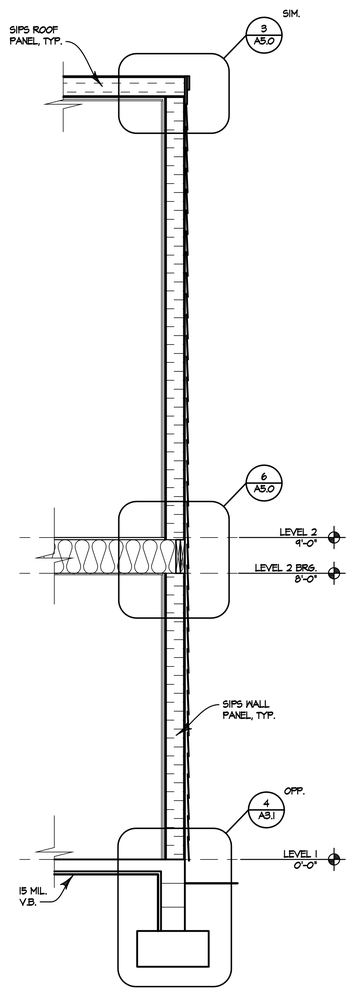

3 A2.2 BLDG. SECTION
1/2" = 1'-0"

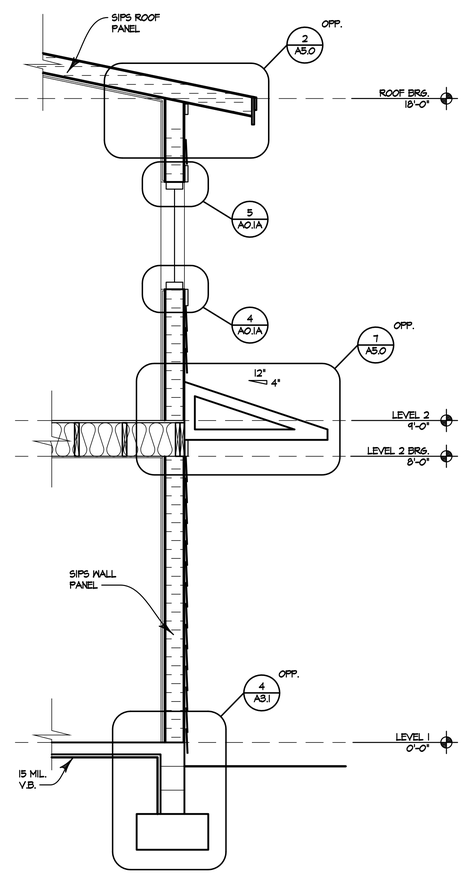

2 A2.2 BLDG. SECTION
1/2" = 1'-0"

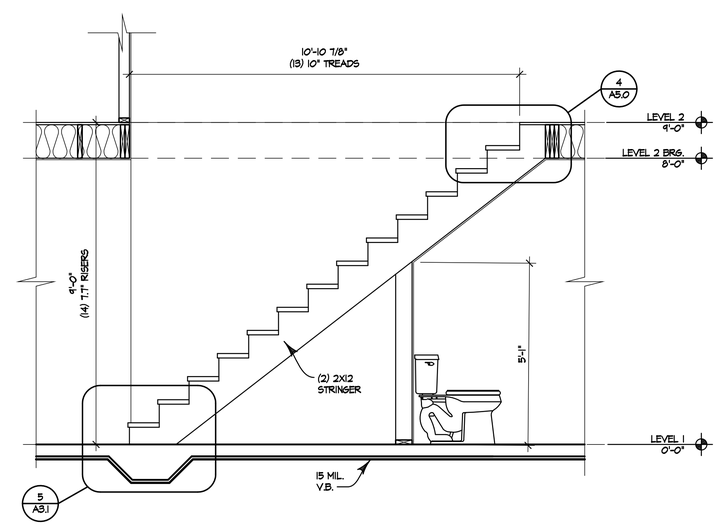

1 A2.2 STAIR SECTION
1/2" = 1'-0"

Copyright 2020: All rights reserved-no part of this document may be reproduced in any form without permission of Klar and Klar Architects, Inc.

	revision	by
△		
△		
△		
△		
△		
△		

SIXTEENTH SQUARE - BUILDING 1

1523 DR. MARTIN LUTHER KING JR. ST. S. ST. PETERSBURG, FL 33705

klar and klar
architects + interior designers

www.klarklar.com

28473 us 19 n
suite 602
clearwater, fl 33761
727-799-5420

American Institute of Architects member firm

☐ Roberta S. Klar
☒ Steven L. Klar

AA 0002321

☐ Preliminary
☒ Permitting Set
☒ Construction Set

Date: 12/15/20

Drawn: SK/EP

Sheet: A2.2

Of:

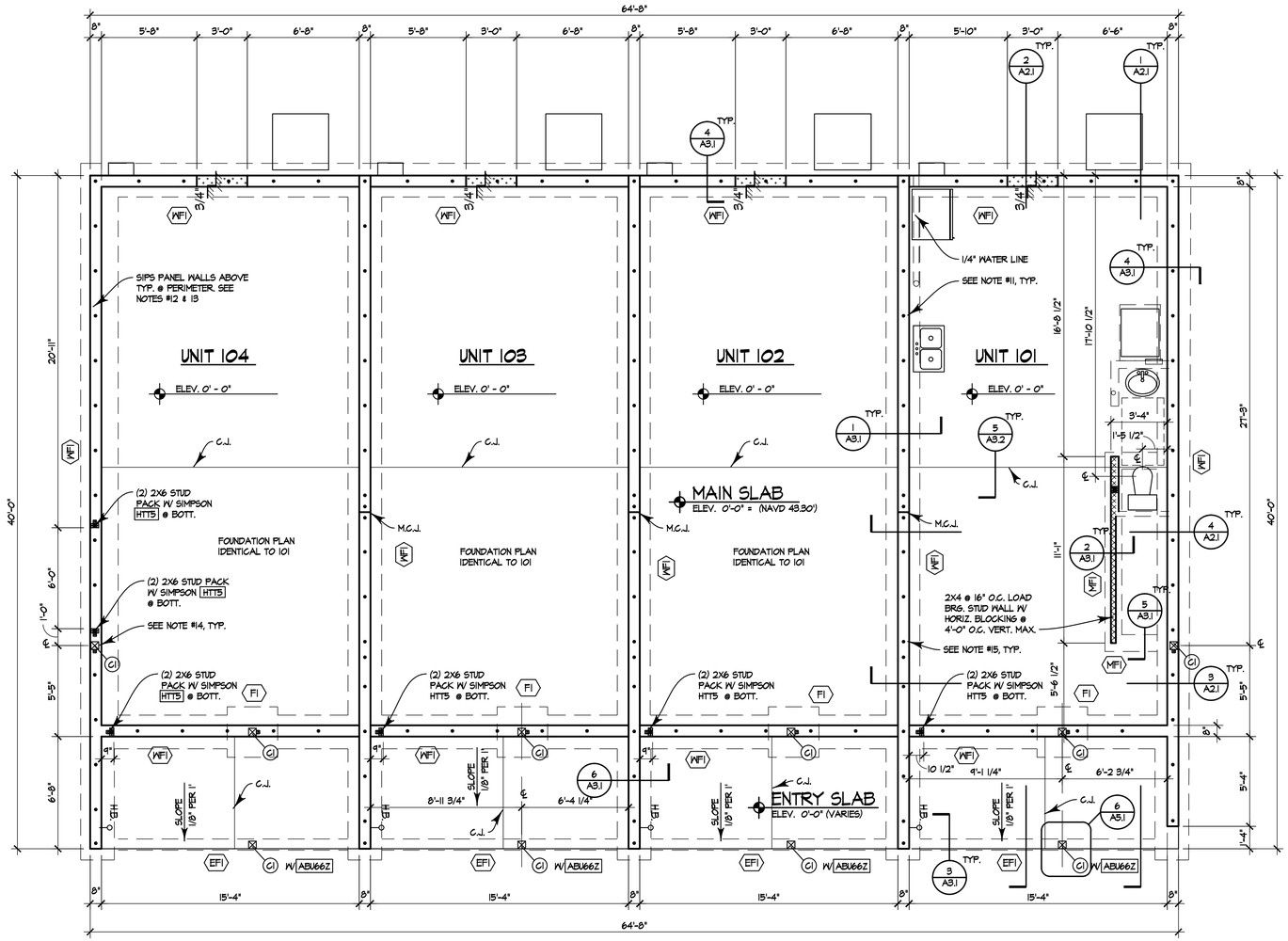

BUILDING 1 - TYP. FOUNDATION PLAN

1 / A3.0 — 1/4" = 1'-0"

NORTH

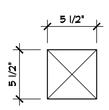

COLUMN C1

2 / A3.0 — 1-1/2" = 1'-0"

FOUNDATION PLAN NOTES:

1. SLAB ON GRADE TO BE 4" THICK, F'C= 3000 PSI CONC. REINFORCED W/ 6X6 - W1.4XW1.4 W.W.F. PROVIDED IN SHEETS ON 15 MIL. VAPOR RETARDER. LAP AND TAPE SEAMS OVER TERMITE TREATED COMPACTED SOIL. FULLY CHAIR W.W.F.
2. TERMITE TREATMENT.
   TERMITE PROTECTION SHALL BE PROVIDED BY REGISTERED TERMITICIDES, INCLUDING SOIL APPLIED PESTICIDES, BAITING SYSTEMS, AND PESTICIDES APPLIED TO WOOD, OR OTHER APPROVED METHODS OF TERMITE PROTECTION LABELED FOR USE AS A PREVENTATIVE TREATMENT TO NEW CONSTRUCTION. FBC R318.1.
3. TOP OF FOOTINGS = 12" MIN. BELOW GRADE. (EL = -1'-4")
4. ALL FOOTING REINFORCING TO BE BOTTOM BARS U.N.O.
5. ALL WALL FOOTINGS TO BE WFI, U.N.O.
6. C.J. = CONTRACTION JOINT.
7. CENTER ALL FOOTINGS BELOW WALLS, AND COLUMNS, U.N.O.
8. M.C.J. = MASONRY CONTROL JOINT. REFER TO PLANS FOR LOCATION.
9. STEP FOOTING AS REQUIRED TO MAINTAIN 12" MINIMUM SOIL COVER ON TOP OF FOOTING BASED ON FINAL SITE GRADING.
10. (2) #4 X 4'-0" MID-DEPTH IN SLAB-ON-GRADE.
11. 8" MASONRY WALLS TO BE #5 VERTICAL @ 40" O.C. MAX. U.N.O. PROVIDE (2) VERT. BARS IN ADJACENT CELLS FULLY GROUTED @ EDGE OF ALL OPENINGS & INTERSECTIONS, TYP.
12. ALL WALLS (EXCEPT WHERE NOTED) ARE TO BE PRE-ENGINEERED SIPS PANELS BY OTHERS, REFER TO SPECS ON A0.3B.
13. THE SIPS PANEL SYSTEM IS THE BUILDINGS MAIN WIND FORCE RESISTING SYSTEM (MWFRS) FOR LATERAL LOADS. THE DELEGATED ENGINEER SHALL ACCOUNT FOR ALL VERTICAL GRAVITY LOADS AND HORIZONTAL WIND LOADS.
14. PROVIDE VERTICAL REBAR IN FULLY GROUTED CELLS UNDER ALL COLUMNS. EXTEND REBAR DOWN AND HOOK INTO FOOTING, TYP.
15. PROVIDE (2) #5 VERTICAL IN ADJACENT CELLS FULLY GROUTED UNDER ALL BEAM BEARING LOCATIONS, TYP.

COLUMN SCHEDULE

MARK	TYPE & SIZE	REMARKS
C1	PT WD. POST 6X6	SIMPSON HTT5 @ BASE (EXCEPT WHERE NOTED)

FOOTING SCHEDULE

MARK	LENGTH	WIDTH	DEPTH	REINFORCING
WFI	CONT.	2'-0"	12"	(3) #5 CONT. & #4 TRANSVERSE @ 24" O.C.
MFI	CONT.	1'-4"	8"	(2) #5 CONT. & #5 @ 12" O.C. TRANSVERSE (MONOLITHIC FOOTING
FI	3'-0"	3'-0"	12"	(3) #5 EA. WAY BOTT.
EFI	CONT.	12"	12"	(2) #5 CONT. & #5 @ 12" O.C. TRANSVERSE

△	revision	by
△		
△		
△		
△		
△		
△		

SIXTEENTH SQUARE - BUILDING 1

1523 DR. MARTIN LUTHER KING JR. ST. S. ST. PETERSBURG, FL 33705

klar and klar
architects + interior designers
www.klarklar.com
28473 us 19 n
suite 602
clearwater, fl 33761
727-799-5420
American Institute of Architects member firm
☐ Roberta S. Klar
☒ Steven L. Klar
AA 0002321

☐ Preliminary
☒ Permitting Set
☒ Construction Set

Date: 12/15/20

Drawn: SK/EP

Sheet: A3.0

Of:

Copyright 2020. All rights reserved-no part of this document may be reproduced in any form without permission of klar and klar Architects, Inc.

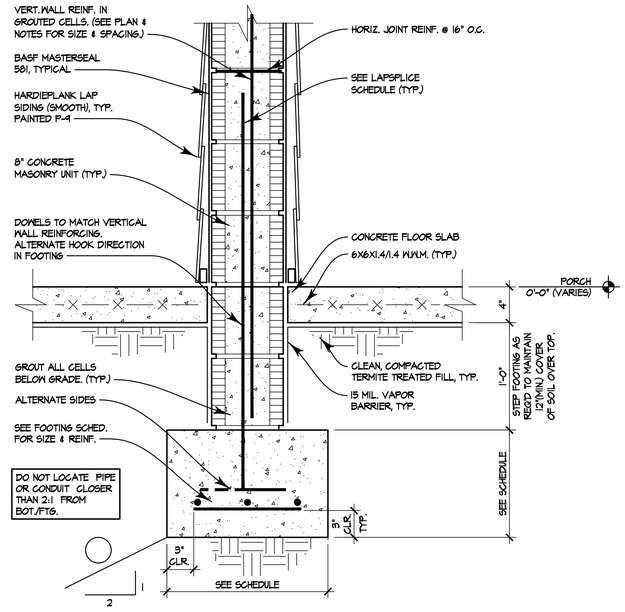

6 A3.1 **WFI FOOTING DETAIL**

1-1/2" = 1'-0"

NOTE: GROUT ALL CELLS BELOW GRADE

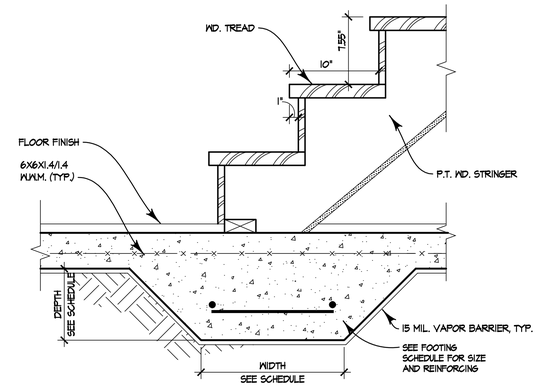

5 A3.1 **STAIR BASE / MFI FOOTING**

1-1/2" = 1'-0"

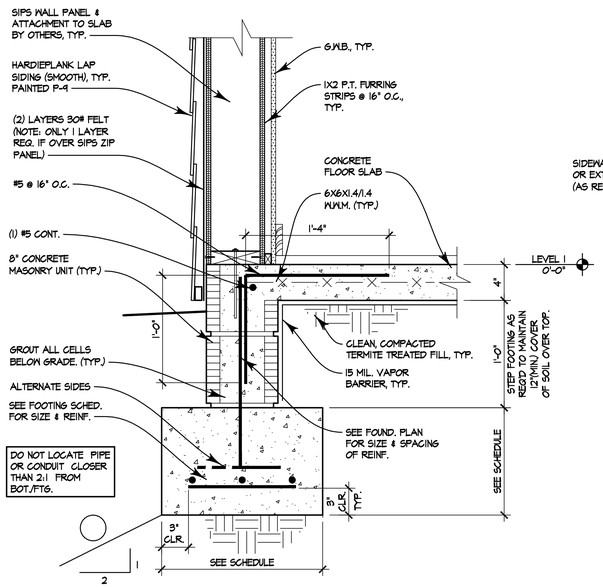

4 A3.1 **WFI FOOTING DETAIL**

1-1/2" = 1'-0"

NOTE: GROUT ALL CELLS BELOW GRADE

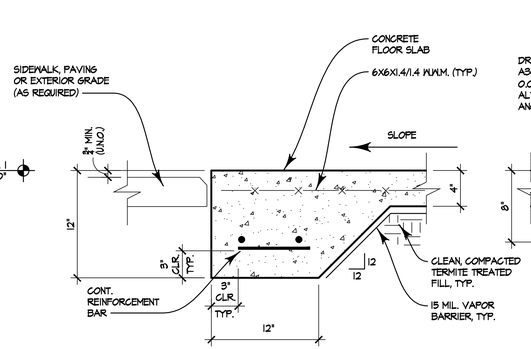

3 A3.1 **EFI FOOTING DETAIL**

1-1/2" = 1'-0"

SEE FOOTING SCHEDULE FOR SIZE AND REINF.

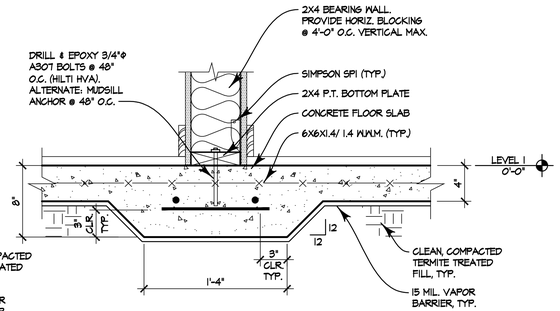

2 A3.1 **MFI FOOTING DETAIL**

1-1/2" = 1'-0"

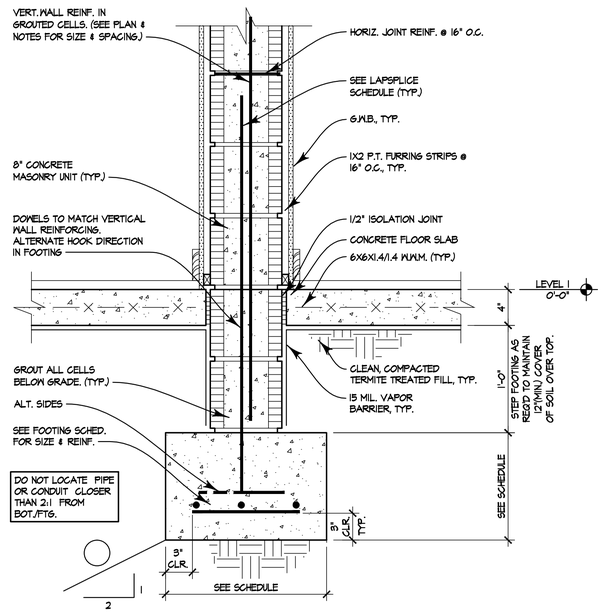

1 A3.1 **WFI FOOTING DETAIL**

1-1/2" = 1'-0"

NOTE: GROUT ALL CELLS BELOW GRADE

Copyright 2020. All rights reserved-no part of this document may be reproduced in any form without permission of klar and klar Architects, Inc.

	revision	by
△		
△		
△		
△		
△		
△		

SIXTEENTH SQUARE - BUILDING I

1523 DR. MARTIN LUTHER KING JR. ST. S. ST. PETERSBURG, FL 33705

klar and klar
architects + interior designers
www.klarklar.com
28473 us 19 n
suite 602
clearwater, fl 33761
727-799-5420
American Institute of Architects member firm
☐ Roberta S. Klar
☒ Steven L. Klar
AA 0002321

☐ Preliminary
☒ Permitting Set
☒ Construction Set

Date: 12/15/20

Drawn: SK/EP

Sheet: A3.1

Of:

NOTES

1. EXTEND JOINT VERTICALLY FROM TOP OF FOOTING TO ROOF.
2. DISCONTINUE AT INTERMEDIATE TIE BEAMS AND ROOF TIE BEAMS.
3. SCORE ALL TIE BEAMS ON BOTH SIDES OF WALL TO MATCH JOINT.
4. SPACE JOINTS AT 26'-0" O.C. MAXIMUM.
5. COORDINATE LOCATIONS OF JOINTS WITH ARCH. JOINT LOCATIONS.

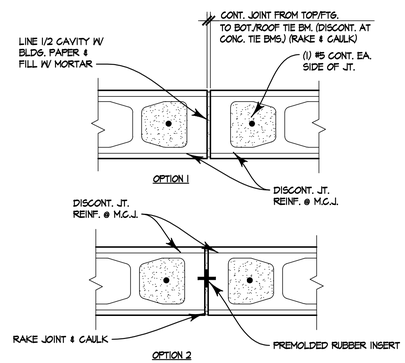

7 / A3.2 MASONRY CONTROL JOINT
N.T.S. UNREFERENCED

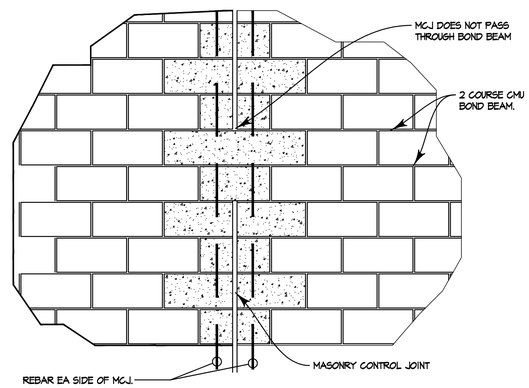

6 / A3.2 MASONRY CONTROL JOINT ELEV.
N.T.S. UNREFERENCED

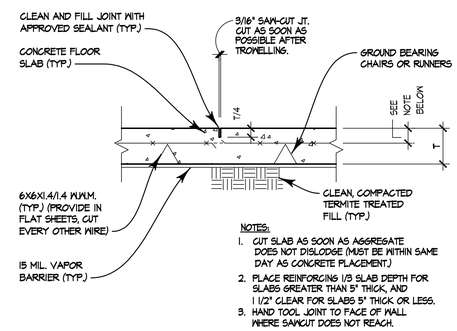

NOTES:

1. CUT SLAB AS SOON AS AGGREGATE DOES NOT DISLODGE (MUST BE WITHIN SAME DAY AS CONCRETE PLACEMENT.)
2. PLACE REINFORCING 1/3 SLAB DEPTH FOR SLABS GREATER THAN 5" THICK, AND 1 1/2" CLEAR FOR SLABS 5" THICK OR LESS.
3. HAND TOOL JOINT TO FACE OF WALL WHERE SAWCUT DOES NOT REACH.

5 / A3.2 SLAB ON GRADE CONTRACTION JT.
N.T.S.

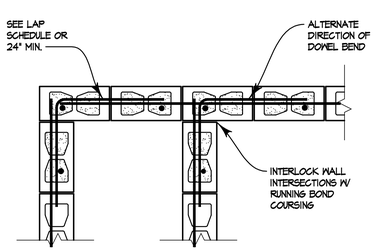

4 / A3.2 8" BOND BEAM CONN.
N.T.S. UNREFERENCED

LOW LIFT GROUTING PROCEDURE:

1. CONSTRUCT WALL TO HEIGHT OF 4'-0" ALLOW MORTAR TO SET SUFFICIENTLY TO WITHSTAND GROUT PRESSURE.
2. INSPECT UNITS FOR ALIGNMENT, CLEAN OUT CELLS TO BE FILLED.
3. FILL CELLS TO 1/2" BELOW TOP COURSE.
4. DELAY 3 TO 5 MINUTES PRIOR TO CONSOLIDATING TO ALLOW WATER TO BE ABSORBED BY MASONRY.

HIGH LIFT GROUTING PROCEDURE:

1. CONSTRUCT WALL TO FULL HEIGHT (24 FEET MAX.) ALLOW MASONRY TO CURE AT LEAST 3 DAYS.
2. CLEAN CELLS, WHICH ARE TO BE GROUTED THROUGH CLEAN-OUT PORTS.
3. PLACE GROUT IN 4 FOOT LIFTS AND CONSOLIDATE AFTER EXCESS MOISTURE HAS BEEN ABSORBED BY MASONRY.
4. PLACE THE NEXT LIFT AS SOON AS POSSIBLE BUT NO LONGER THAN ON HOUR LATER.

3 / A3.2
N.T.S. UNREFERENCED

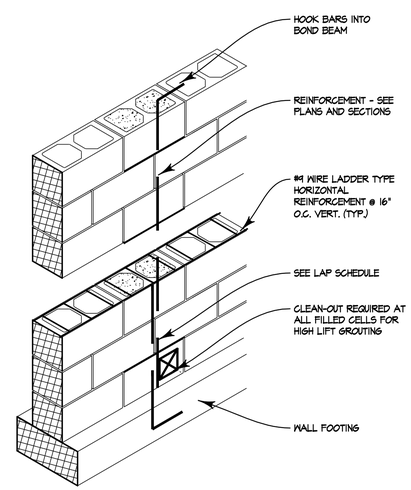

2 / A3.2 WALL REINFORCING
N.T.S. UNREFERENCED

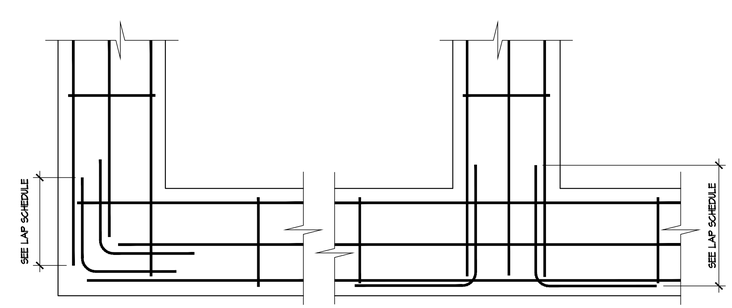

PLAN AT CORNER PLAN AT INTERSECTION

1 / A3.2 FOUNDATION CORNER BAR PLACING DETAILS
3/4" = 1'-0" UNREFERENCED

Copyright 2020. All rights reserved-no part of this document may be reproduced in any form without permission of Klar and Klar Architects, Inc.

	revision	by
△		
△		
△		
△		
△		
△		

SIXTEENTH SQUARE - BUILDING I

1523 DR. MARTIN LUTHER KING JR. ST. S. ST. PETERSBURG, FL 33705

klar and klar
architects + interior designers
www.klarklar.com
28473 us 19 n
suite 602
clearwater, fl 33761
727-799-5420
American Institute of Architects member firm
☐ Roberta S. Klar
☒ Steven L. Klar
AA 0002321

☐ Preliminary
☒ Permitting Set
☒ Construction Set

Date: 12/15/20
Drawn: SK/EP
Sheet: A3.2
Of:

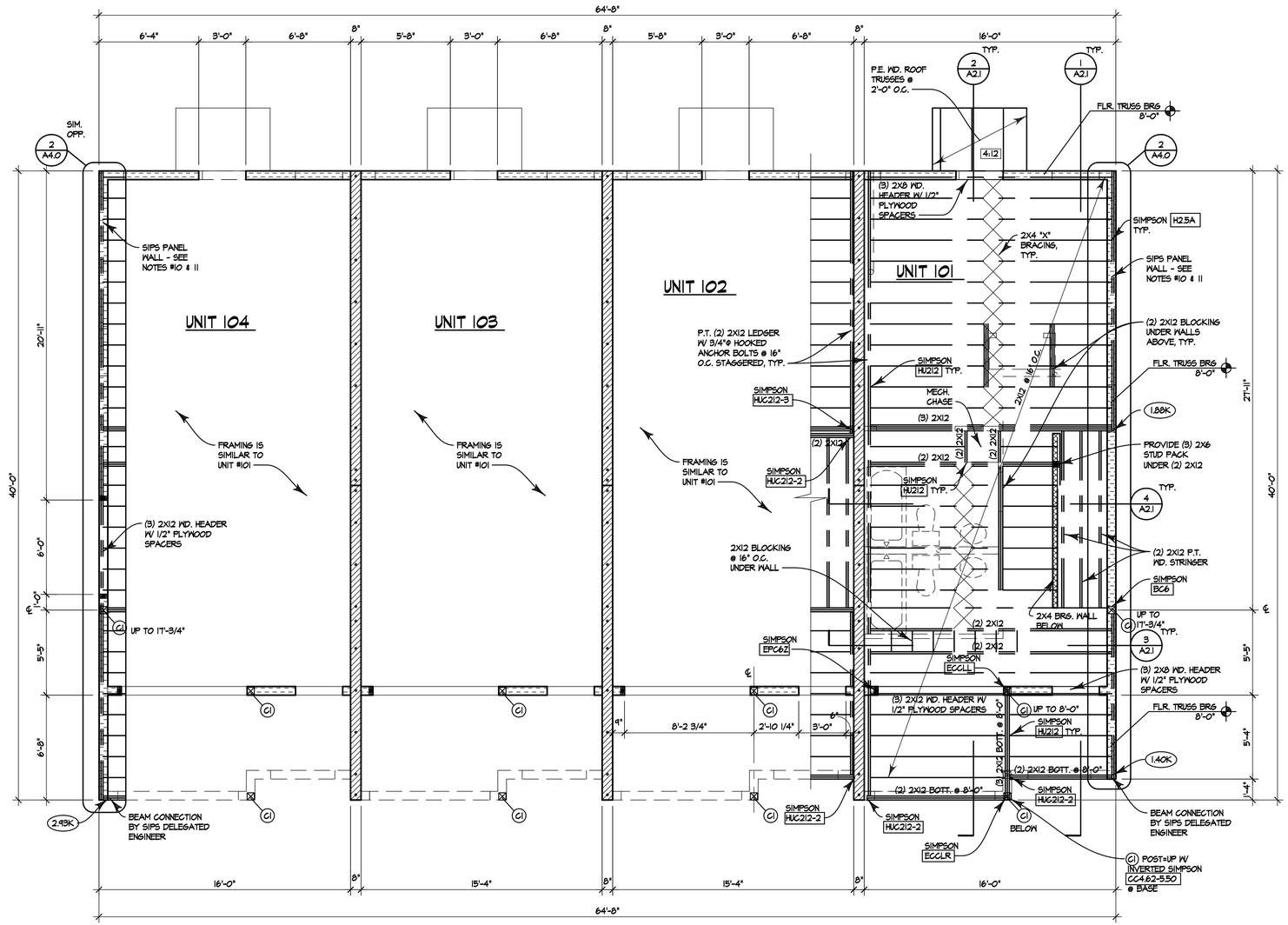

NORTH

1 / A4.0 FLOOR FRAMING PLAN

1/4" = 1'-0"

KEY

= SIPS WALL UP TO 8'-0"

= CMU WALL W/ (2) COURSE K.O. BLOCK BOTT. @ 8'-0"

FLOOR FRAMING NOTES:

1. [X] INDICATES MODEL NO. OF METAL CONNECTOR BY SIMPSON STRONG-TIE.
2. FLOOR JOISTS TO BE 2X12 @ 16" O.C.
3. ⬭ INDICATES DL + LL BEAM REACTIONS IN KIPS. (SERVICE LOADS)
4. SEE A3.0 FOR COLUMN SCHEDULE.
5. ALL MASONRY VERTICAL WALL REINFORCING TO BE #5 BARS @ 32" O.C. MAX.
6. FIREBLOCKING SHALL BE PROVIDED IN CONCEALED SPACES OF STUD WALLS AND PARTITIONS, INCLUDING FURRED SPACES AND PARALLEL ROWS OF STUDS OR STAGGERED STUDS AS FOLLOWS: (PER F.B.C. R302.11)
   - VERTICALLY AT THE CEILING AND FLOOR LEVELS
   - HORIZONTALLY AT INTERVALS NOT EXCEEDING 10 FEET
7. APPROVED FIREBLOCKING MATERIALS INCLUDE TWO-INCH NOMINAL LUMBER AND 1/2" (MIN.) GYPSUM BOARD. (PER F.B.C. R302.11.1) SEE F.B.C. FOR ADDITIONAL APPROVED MATERIALS.
8. DRAFTSTOPS SHALL BE INSTALLED SO THAT THE AREA OF THE CONCEALED SPACE DOES NOT EXCEED 1,000 SF. DRAFTSTOPPING SHALL DIVIDE THE CONCEALED SPACE INTO APPROXIMATELY EQUAL AREAS. (PER F.B.C. R302.12)
9. DRAFTSTOPPING MATERIALS SHALL BE NOT LESS THAN 1/2-INCH GYPSUM BOARD, 3/8-INCH WOOD STRUCTURAL PANELS OR OTHER APPROVED MATERIALS ADEQUATELY SUPPORTED. (PER F.B.C. R-302.12.1)
10. ALL WALLS (EXCEPT WHERE NOTED) ARE TO BE PRE-ENGINEERED SIPS PANELS BY OTHERS. REFER TO SPECS ON A0.3B.
11. THE SIPS PANEL SYSTEM IS THE BUILDINGS MAIN WIND FORCE RESISTING SYSTEM (MWFRS) FOR LATERAL LOADS. THE DELEGATED ENGINEER SHALL ACCOUNT FOR ALL VERTICAL GRAVITY LOADS AND HORIZONTAL WIND LOADS.

△	revision	by
△		
△		
△		
△		
△		
△		

SIXTEENTH SQUARE - BUILDING 1

1523 DR. MARTIN LUTHER KING JR. ST. S. ST. PETERSBURG, FL 33705

klar and klar
architects + interior designers

www.klarklar.com

28473 us 19 n
suite 602
clearwater, fl 33761
727-799-5420

American Institute of Architects member firm

☐ Roberta S. Klar
☒ Steven L. Klar

AA 0002321

☐ Preliminary
☒ Permitting Set
☒ Construction Set

Date: 12/15/20

Drawn: SK/EP

Sheet: A4.0

Of:

Copyright 2020. All rights reserved-no part of this document may be reproduced in any form without permission of Klar and Klar Architects, Inc.

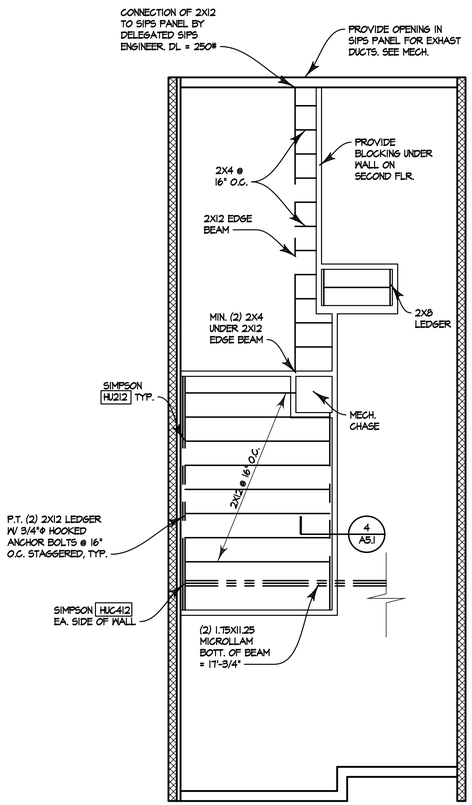

2 A4.1 INT. DROP CLG. FRAMING

1/4" = 1'-0"

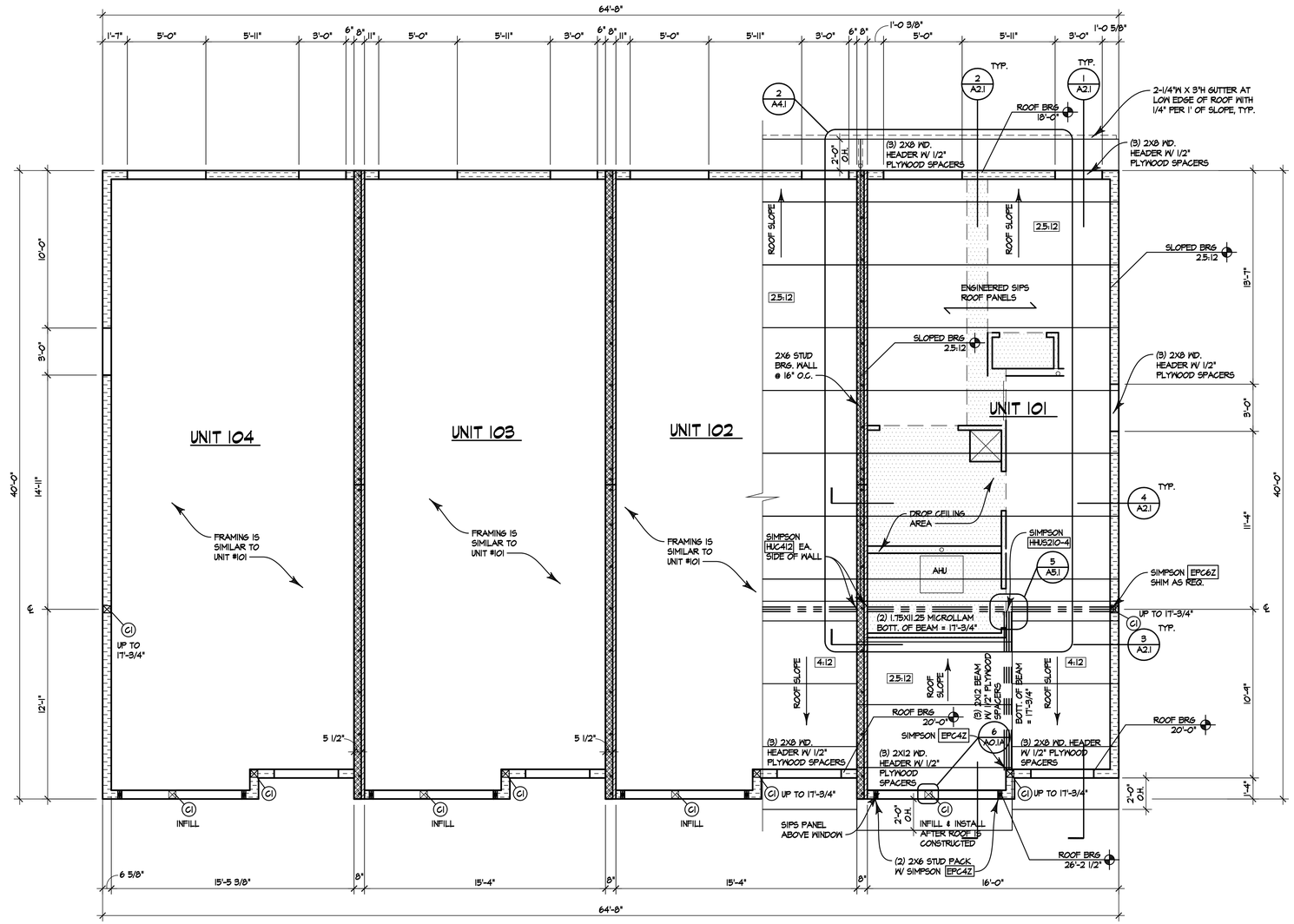

NORTH

1 A4.1 ROOF FRAMING PLAN

1/4" = 1'-0"

KEY

= SIPS WALL

= CMU WALL W/ (2) COURSE K.O. BLOCK TOP @ 17'-4"

= 2X6 STUD BRG. WALL

ROOF FRAMING NOTES:

1. ROOF FRAMING SHALL BE SIPS ROOF PANELS.
2. [X] = CONNECTOR BY SIMPSON STRONG-TIE. ALL CONNECTORS ARE TO BE FULLY NAILED PER MANUFACTURER'S SPECIFICATIONS.
3. ALL SIPS ROOF PANEL AND WALL PANEL CONNECTIONS BY DELEGATED TRUSS ENGINEER.
4. SEE ARCHITECTURAL SECTIONS FOR CEILING FRAMING AND SOFFIT/FASCIA FRAMING.
5. CONTRACTOR/ERECTOR IS RESPONSIBLE FOR ALL TEMPORARY BRACING.
6. G.C. TO PROVIDE SEPARATION (VAPOR BARRIER) BETWEEN WOOD AND CMU.
7. ROOF SLOPE - SEE PLAN.

	revision	by
△		
△		
△		
△		
△		
△		
△		

SIXTEENTH SQUARE - BUILDING 1

1523 DR. MARTIN LUTHER KING JR. ST. S. ST. PETERSBURG, FL 33705

klar and klar architects + interior designers

www.klarklar.com

28473 us 19 n
suite 602
clearwater, fl 33761
727-799-5420

American Institute of Architects member firm

☐ Roberta S. Klar
☒ Steven L. Klar

AA 0002321

☐ Preliminary
☒ Permitting Set
☒ Construction Set

Date: 12/15/20

Drawn: SK/EP

Sheet: A4.1

Of:

Copyright 2020. All rights reserved-no part of this document may be reproduced in any form without permission of Klar and Klar Architects, Inc.

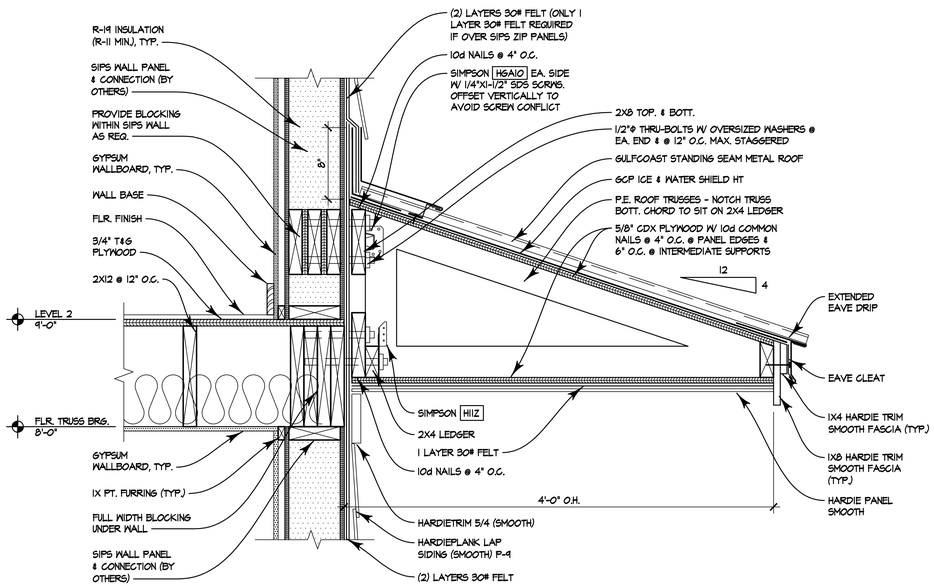

7 A5.0 **SECT. DETAIL**

1-1/2"=1'-0"

NOTE:
PROVIDE 5/8" CDX PLYWOOD SHEATHING ON SIDES OF TRUSSES EA. END.

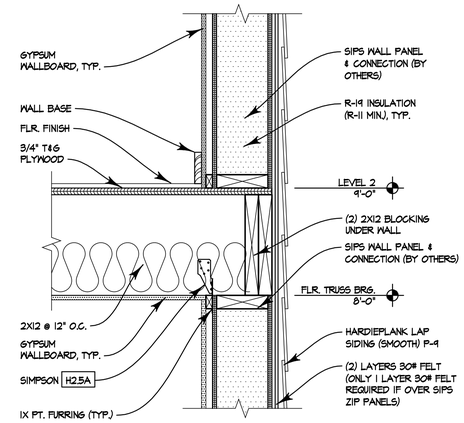

6 A5.0 **SECT. DETAIL**

1-1/2"=1'-0"

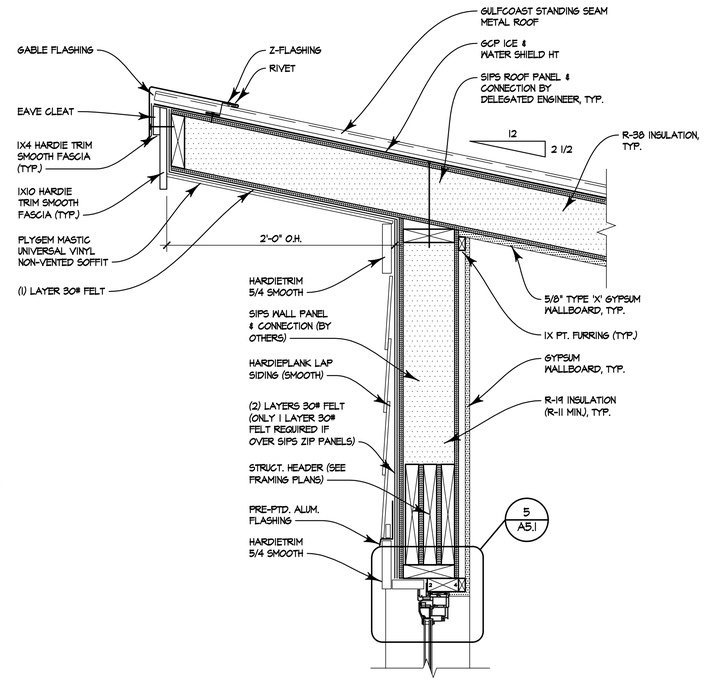

5 A5.0 **SECT. DETAIL**

1-1/2"=1'-0"

NOTE:
5/8" TYPE 'X' GYPSUM WALLBOARD MUST BE APPLIED DIRECTLY TO UNDERSIDE OF PLYWOOD TO ACHIEVE RATING, TYP.

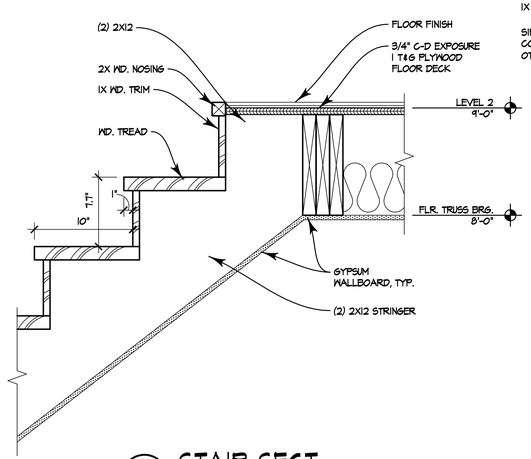

4 A5.0 **STAIR SECT.**

1-1/2"=1'-0"

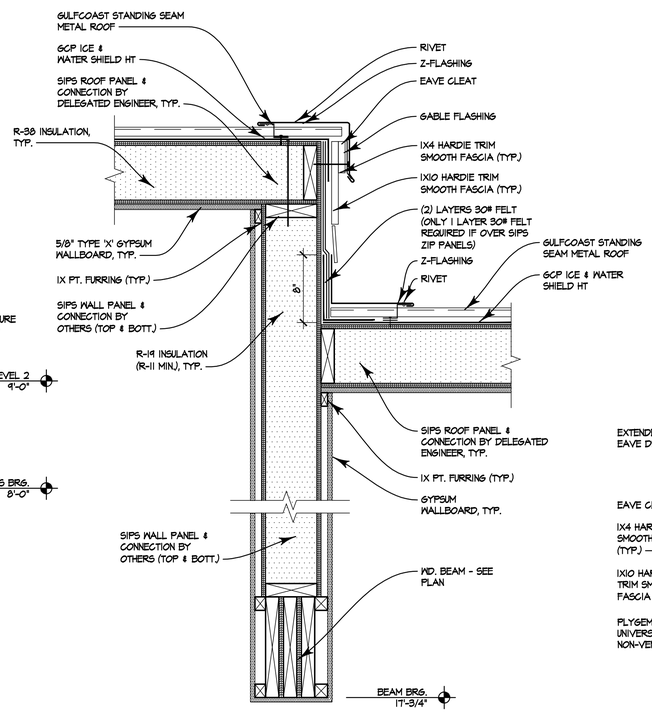

3 A5.0 **SECT. DETAIL**

1-1/2"=1'-0"

NOTE:
5/8" TYPE 'X' GYPSUM WALLBOARD MUST BE APPLIED DIRECTLY TO UNDERSIDE OF PLYWOOD TO ACHIEVE RATING, TYP.

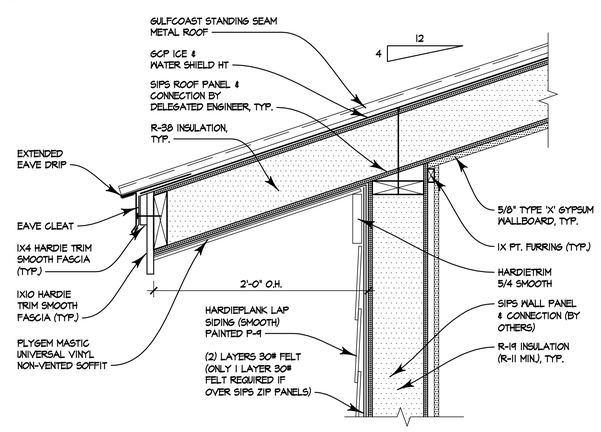

2 A5.0 **SECT. DETAIL**

1-1/2"=1'-0"

NOTE:
5/8" TYPE 'X' GYPSUM WALLBOARD MUST BE APPLIED DIRECTLY TO UNDERSIDE OF PLYWOOD TO ACHIEVE RATING, TYP.

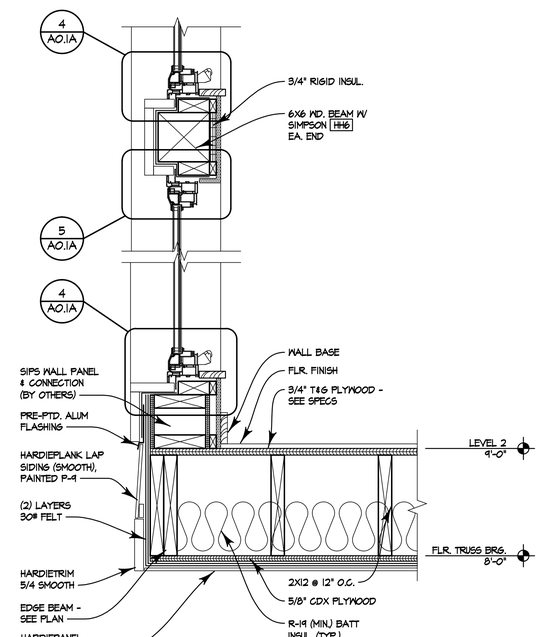

1 A5.0 **SECT. DETAIL**

1-1/2"=1'-0"

	revision	by
△		
△		
△		
△		
△		
△		

SIXTEENTH SQUARE - BUILDING I

1523 DR. MARTIN LUTHER KING JR. ST. S. ST. PETERSBURG, FL 33705

klar and klar
architects + interior designers
www.klarklar.com
28473 us 19 n
suite 602
clearwater, fl 33761
727-799-5420
American Institute of Architects member firm
☐ Roberta S. Klar
☒ Steven L. Klar

AA 0002321

☐ Preliminary
☒ Permitting Set
☒ Construction Set

Date: 12/15/20

Drawn: SK/EP

Sheet: A5.0

Of:

Copyright 2020. All rights reserved-no part of this document may be reproduced in any form without permission of Klar and Klar Architects, inc.

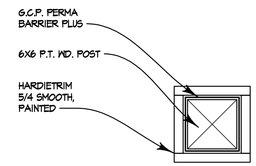

6 A5.1 COL. PLAN DETAIL
1-1/2"=1'-0"

NOTE:
FOR SIDE LOADED MULTIPLE MEMBER BEAMS, ADDITIONAL NAILING OR BOLTING MAY BE REQUIRED.

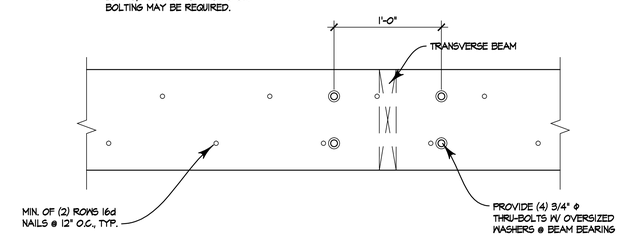

5 A5.1 MICROLLAM BM. NAILING PATT. FOR MULT. PIECES
1-1/2"=1'-0"

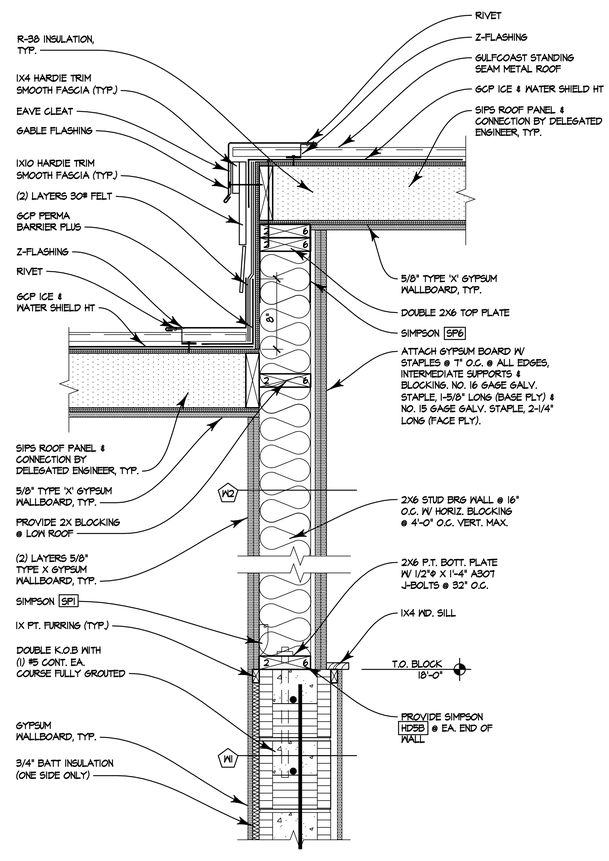

2 A5.1 SECT. DETAIL
1-1/2"=1'-0"

NOTE:
5/8" TYPE 'X' G.W.B. MUST BE APPLIED DIRECTLY TO UNDERSIDE OF PLYWOOD TO ACHIEVE RATING, TYP.

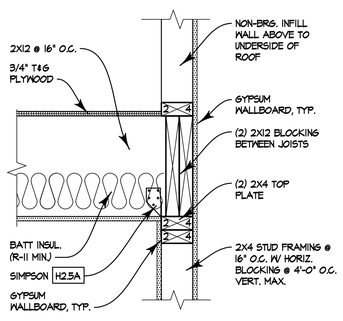

4 A5.1 SECT. DETAIL
1-1/2"=1'-0"

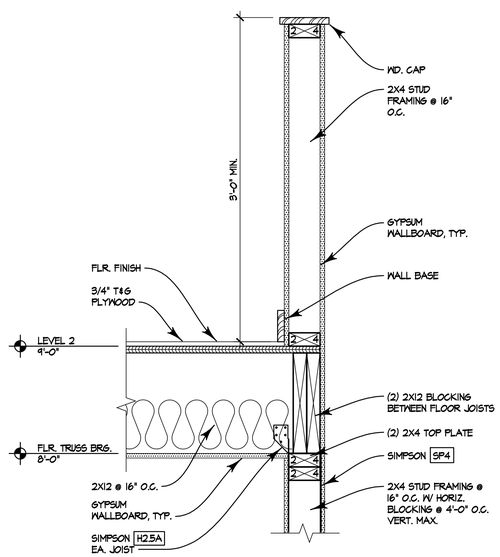

3 A5.1 SECT. DETAIL
1-1/2"=1'-0"

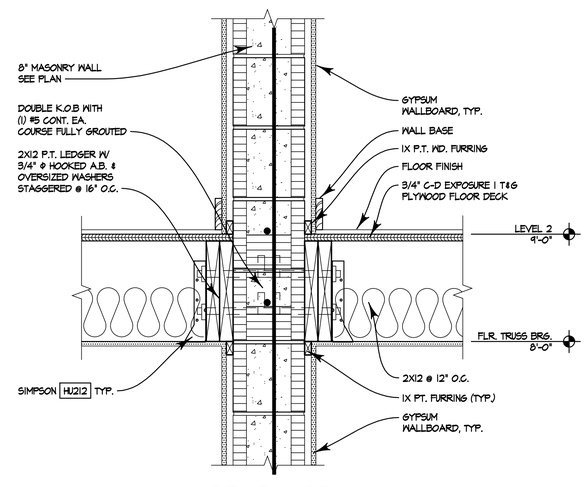

1 A5.1 SECT. DETAIL
1-1/2"=1'-0"

	revision	by
△		
△		
△		
△		
△		
△		

SIXTEENTH SQUARE - BUILDING 1
1523 DR. MARTIN LUTHER KING JR. ST. S. ST. PETERSBURG, FL 33705

klar and klar
architects + interior designers

www.klarklar.com

28473 us 19 n
suite 602
clearwater, fl 33761
727-799-5420

American Institute of Architects member firm

☐ Roberta S. Klar
☒ Steven L. Klar

AA 0002321

☐ Preliminary
☒ Permitting Set
☒ Construction Set

Date: 12/15/20

Drawn: SK/EP

Sheet: A5.1

Of:

Copyright 2020. All rights reserved-no part of this document may be reproduced in any form without permission of klar and klar Architects, inc.

CABINET SPECIFICATIONS:

1. ALL FRONTS, TOPS, SIDES, DOORS, DRAWER FRONTS, SHELVES, ARE TO BE CONSTRUCTED FROM MIN. OF 5/8" (AC) PLYWOOD WITH WOOD VENEER. ALL FINISHED EDGES TO BE SOLID WOOD SPECIES TO MATCH VENEER.
2. ALL DRAWER BOTTOMS AND SIDES ARE TO BE MIN. 1/2" AC PLYWOOD WITH FINISHED SURFACES TO BE PLASTIC LAMINATE.
3. ANY/ALL CABINET SHELVES TO BE ADJUSTABLE. INCLUDE (2) SHELVES IN UPPER CABS AND ONE IN LOWER CABS WITH PLASTIC LAMINATE FINISHES.
4. IT IS THE RESPONSIBILITY OF THE CONTRACTOR TO PROVIDE NECESSARY P.T. BLOCKING FOR STRUCTURAL STABILITY FOR ANY WALL-MOUNTED ACCESSORIES AND FIXTURES.

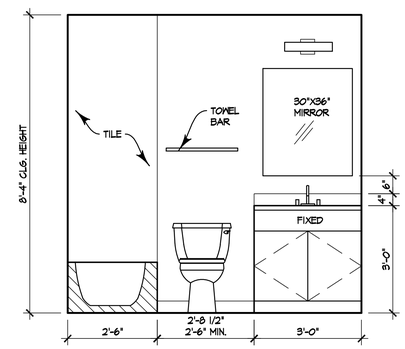

5 A6.0 BATH 2
1/2" = 1'-0"

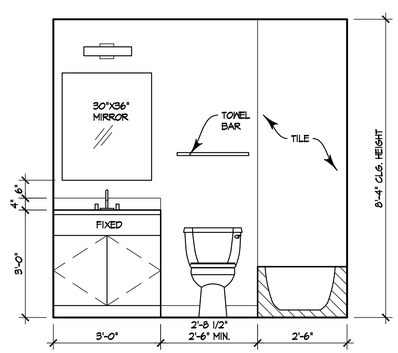

4 A6.0 BATH 1
1/2" = 1'-0"

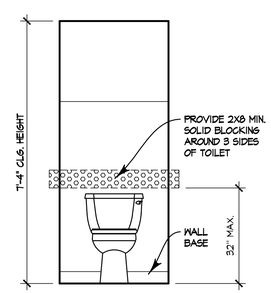

3 A6.0 POWDER
1/2" = 1'-0"

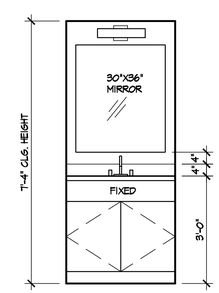

2 A6.0 POWDER
1/2" = 1'-0"

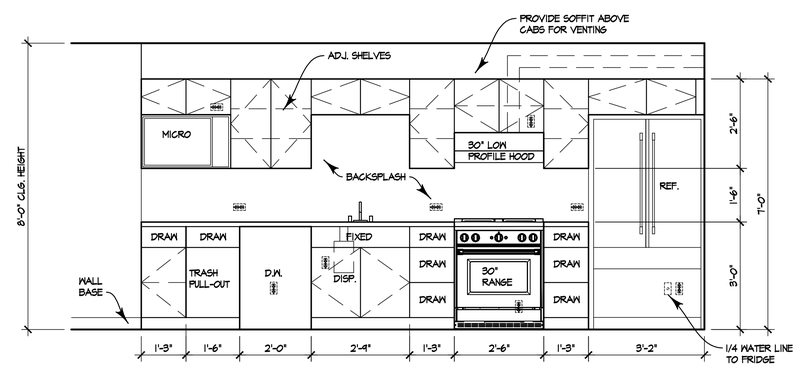

1 A6.0 KITCHEN
1/2" = 1'-0"

△	revision	by
△		
△		
△		
△		
△		
△		

SIXTEENTH SQUARE - BUILDING I

1523 DR. MARTIN LUTHER KING JR. ST. S. ST. PETERSBURG, FL 33705

klar and klar
architects + interior designers
www.klarklar.com
28473 us 19 n
suite 602
clearwater, fl 33761
727-799-5420
American Institute of Architects member firm
☐ Roberta S. Klar
☒ Steven L. Klar
AA 0002321

☐ Preliminary
☒ Permitting Set
☒ Construction Set

Date: 12/15/20
Drawn: SK/EP
Sheet: A6.0
Of:

Copyright 2020. All rights reserved-no part of this document may be reproduced in any form without permission of Klar and Klar Architects, Inc.

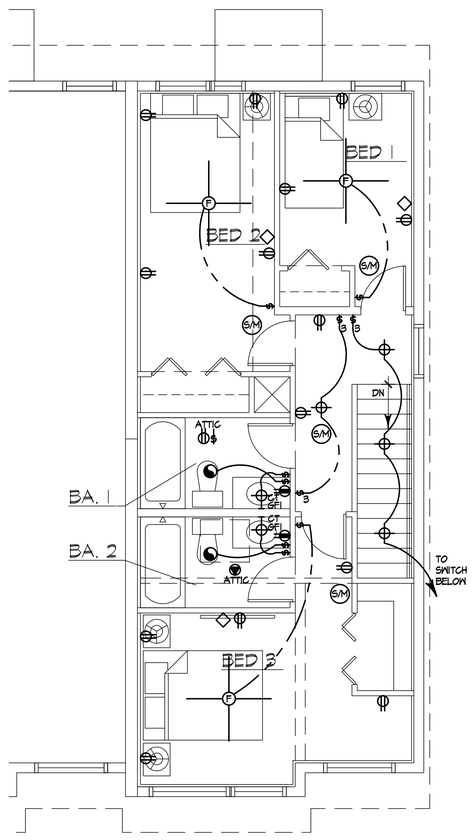

1 / E1.0 SECOND FLOOR TYP. ELECTRICAL PLAN

1/4" = 1'-0"

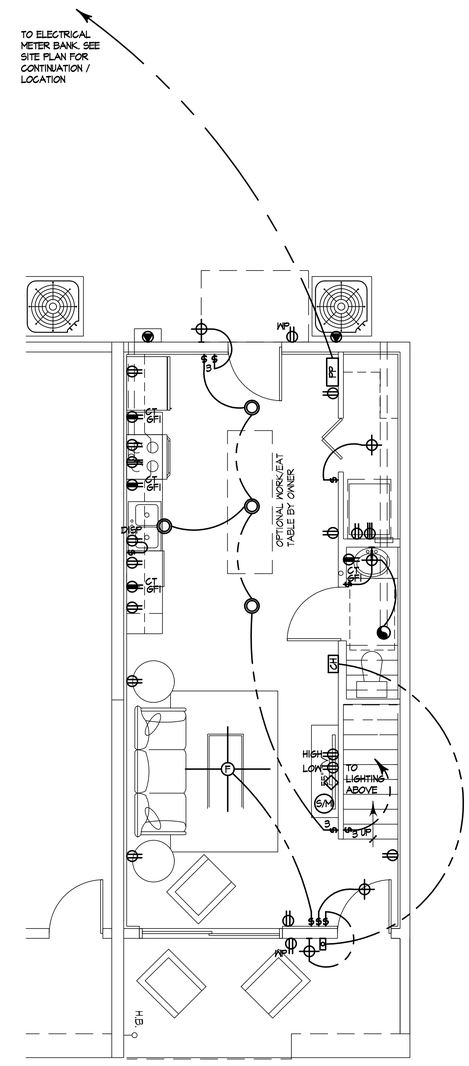

1 / E1.0 FIRST FLOOR TYP. ELECTRICAL PLAN

1/4" = 1'-0"

NOTE:
ALL LIGHT SWITCHES AND THERMOSTATS SHALL BE < 48" A.F.F.

LEGEND

- 120V DUPLEX OUTLET
- 120V DUPLEX SWITCHED OUTLET
- CT GFI — 120V DUPLEX OUTLET ABOVE COUNTER TOP
- WP — 120V DUPLEX OUTLET WITH WATERPROOF COVER
- GFI — 120V DUPLEX OUTLET GROUND FAULT INTERCEPTER
- 240V SPECIALTY OUTLET
- SPECIALTY DIRECT WIRE
- SWITCH
- RECESS CAN FIXTURE
- FLUORESCENT FIXTURE
- CEILING MOUNT FIXTURE
- WALL MOUNT FIXTURE
- F — CEILING FAN MOUNT/PREWIRE
- EXHAUST FAN
- S/M — COMBINATION SMOKE & CARBON MONOXIDE ALARM
- CABLE TV JACK
- PP — POWER PANEL
- PB — PUSH BUTTON
- CH — CHIME
- FLOOD LIGHTS
- 2X2 — TEC PORT 2 ◇ & 2 ▼
- 1X1 — TEC PORT 1 ◇ & 1 ▽

NOTES:

1. ELECTRICAL PLAN IS INTENDED FOR BID PURPOSE ONLY.
2. ALL WORK SHALL BE DONE IN STRICT ACCORDANCE WITH NATIONAL ELECTRIC CODE, LATEST EDITION, BY A LICENSED ELECTRICAL CONTRACTOR WHO SHALL BE RESPONSIBLE FOR THE INSTALLATION AND SIZING OF ALL ELECTRICAL EQUIPMENT, WIRING AND ACCESSORIES.
3. ALL RECEPTACLES IN KITCHEN BACKSPLASHES ARE TO BE PLACED HORIZONTALLY.
4. ALL BRANCH CIRCUITS SUPPLYING OUTLETS OR DEVICES INSTALLED IN DWELLING UNIT KITCHENS, FAMILY ROOMS, DINING ROOMS, LIVING ROOMS, PARLORS, LIBRARIES, DENS, BEDROOMS, SUNROOMS, RECREATION ROOMS, CLOSETS, HALLWAYS, LAUNDRY AREAS, OR SIMILAR ROOMS OR AREAS SHALL BE PROTECTED BY AFCI'S.

△	revision	by
△		
△		
△		
△		
△		
△		

SIXTEENTH SQUARE - BUILDING I

1523 DR. MARTIN LUTHER KING JR. ST. S. ST. PETERSBURG, FL 33705

klar and klar
architects + interior designers
www.klarklar.com
28473 us 19 n
suite 602
clearwater, fl 33761
727-799-5420
American Institute of Architects member firm
☐ Roberta S. Klar
☒ Steven L. Klar

AA 0002321

☐ Preliminary
☒ Permitting Set
☒ Construction Set

Date: 12/15/20

Drawn: SK/EP

Sheet: E1.0

Of:

Copyright 2020. All rights reserved-no part of this document may be reproduced in any form without permission of klar and klar Architects, inc.

MECHANICAL GENERAL NOTES:

1. DUCT SIZES ARE CLEAR, INSIDE DIMENSIONS. VERIFY ALL DIMENSIONS AND LOCATIONS PRIOR TO FABRICATION OR INSTALLATION.
   ALL DUCTWORK SHALL BE TYPE 800 FIBERGLASS EQUAL TO JOHNS-MANVILLE. DUCT SHALL BE 1-1/2" THICK WITH AN "R" VALUE OF 6.
   ALL JOINTS AND CONNECTIONS TO BE SEALED WITH MASTIC.
   EXHAUST DUCT AND DRYER VENTING SHALL BE GALVANIZED STEEL SNAP-LOK WITH ALL JOINTS SEALED WITH MASTIC. ALL DUCT SHALL BE CONSTRUCTED AND INSTALLED PER SMACNA REQUIREMENTS.
2. ALL BRANCH CONNECTIONS SHALL BE CLASS ONE FLEXIBLE DUCT WITH A MANUAL VOLUME DAMPER INSTALLED IN THE COLLAR AT THE MAIN TRUNK FOR BALANCING PURPOSES.
3. THE HVAC CONTRACTOR SHALL ANTICIPATE AND PROVIDE ALL INCIDENTAL AND PERIPHERAL ITEMS WHICH ARE OBVIOUSLY REQUIRED AND NECESSARY TO COMPLETE THE INSTALLATION REGARDLESS IF THESE ITEMS ARE SPECIFIED AND/OR SHOWN ON THE PLAN(S).
4. ALL WALL PENETRATIONS SHALL BE MADE AND SEALED BY THE GENERAL CONTRACTOR.
5. CONTRACTOR SHALL PROVIDE SUBMITTAL DATA IN PDF FORMAT FOR APPROVAL.
6. DEVIATION FROM MATERIALS, METHODS, OR PROCEDURES SET FORTH HEREIN MUST BE APPROVED, IN WRITING, BY ENGINEER PRIOR TO SUBMISSION OF BID, ORDER, FABRICATION OR INSTALLATION.
7. ANY AND ALL QUESTIONS AS TO THE INTENT OF, OR PROCEDURES SET FORTH IN THESE DRAWINGS MUST BE BROUGHT TO THE ATTENTION OF THE ENGINEER PRIOR TO SUBMISSION OF A BID. LACK OF KNOWLEDGE OR UNDERSTANDING OF PLANS SHALL NOT JUSTIFY ANY CLAIMS OR EXTRA COMPENSATION.
8. INSTALLATION SHALL COMPLY WITH THE 2011 FBC - MECHANICAL, SIXTH EDITION.
9. THE HVAC CONTRACTOR SHALL COORDINATE ALL EQUIPMENT, DUCT, & DIFFUSER LOCATIONS AND CLEARANCES WITH STRUCTURE AND ALL OTHER TRADES ON PROJECT, IN PRECONSTRUCTION MEETING, PRIOR TO ANY ORDER, FABRICATION, OR INSTALLATION.
10. THERMOSTATS SHALL BE MANUFACTURER 7-DAY PROGRAMMABLE MODEL WITH SUB-BASE. MOUNT THERMOSTATS AT 48" ABOVE FINISHED FLOOR, TYPICAL.
11. SUPPLY DUCTWORK SHALL BE CONSTRUCTED, FABRICATED, AND INSTALLED IN ACCORDANCE WITH SMACNA REQUIREMENTS FOR A 1" POSITIVE STATIC PRESSURE CLASSIFICATION.
12. RETURN AND EXHAUST DUCTWORK SHALL BE CONSTRUCTED, FABRICATED, AND INSTALLED IN ACCORDANCE WITH SMACNA REQUIREMENTS FOR A 1" NEGATIVE STATIC PRESSURE.
13. ALL EXHAUST FAN DISCHARGES AND PLUMBING VENTS SHALL BE A MINIMUM OF 10'-0" FROM FRESH-AIR INTAKES. COORDINATE WITH PLUMBING PLANS PRIOR TO INSTALLATION.
14. PLANS AND DIAGRAMS/DETAILS ARE SCHEMATIC ONLY AND REPRESENT THE GENERAL INTENT OF WHAT IS TO BE INSTALLED AND SHOULD NOT BE SCALED. THE HVAC CONTRACTOR IS RESPONSIBLE FOR THE COORDINATION WITH ALL STRUCTURAL AND FIELD CONDITIONS AS WELL AS INSTALLATION HEIGHTS OF PIPING, CONDUIT, ETC. OF OTHER TRADES WHOSE SCOPE OVERLAYS THAT OF THE HVAC CONTRACTOR.
15. REFRIGERANT COPPER LIQUID AND SUCTION LINES SHALL BE TYPE 'L' SOFT DRAWN AND SIZED PER MANUFACTURER'S RECOMMENDATIONS. INSULATE SUCTION LINE WITH 3/4" THICK "ARMAFLEX" INSULATION. TAPE ALL JOINTS TIGHT TOGETHER. REFRIGERANT PIPING CONFIGURATION SHALL ASSURE THAT THE REFRIGERANT OIL SATISFACTORILY RETURNS TO THE COMPRESSOR. PAINT ALL EXPOSED INSULATION WITH UV RESISTANT WHITE PAINT.
16. EXTEND SCHEDULE 40 PVC CONDENSATE DRAIN LINES FROM AIR HANDLER TO EXTERIOR AND GRASS/LANDSCAPE AREA AS INDICATED ON PLANS. PROVIDE 24"x24"x24" DEEP DRYWELL WITH RIVER GRAVEL IF NO APPROVED SURFACES EXIST ON WHICH TO DRAIN. INSULATE ENTIRE LENGTH WITH 3/16" WALL ARMAFLEX OR OTHER TYPE INSULATION. PROVIDE SAFE-T SWITCH AT AHU AND FLOAT SWITCH AT SECONDARY PAN.
17. THE MECHANICAL CONTRACTOR SHALL BALANCE ALL HVAC SYSTEMS ON THIS PROJECT TO WITHIN 10% OF THE AIRFLOW QUANTITIES INDICATED ON THE MECHANICAL DRAWINGS.

FAN SCHEDULE

MARK	MANUFACTURER	MODEL NUMBER	AREA	TYPE	CFM.	RPM.	SONES	S.P.	WATTS	H.P.	VOLTS	PHASE	NOTES
EF-1	COOK-GEMINI	GC-220	RESTROOM	CEILING EXHAUST	70	1050	1.3	.25	33	- -	120V.	1PH.	1-4

NOTES:
1. PROVIDE BACKDRAFT DAMPER.
2. FACTORY PLUG DISCONNECT.
3. GALVANIZED STEEL SCREENED WALL CAP.
4. FAN SHALL BE CONTROLLED BY ROOM LIGHT SWITCH.

AIR DISTRIBUTION SCHEDULE

MARK	MANUFACTURER	MODEL NUMBER	SIZE	CFM	NECK	LOCATION	MATERIAL	NOTES:
A	PRICE	ACVD	14 X 14	SEE PLAN	SEE PLAN	CEILING	ALUMINUM	1,2
B	PRICE	620	10 X 6	SEE PLAN	10 X 6	SIDEWALL	ALUMINUM	1,2,6
C	PRICE	ACVD	10 X 6	SEE PLAN	10 X 6	CEILING	ALUMINUM	1,2,4,5
D	PRICE	630	12 X 12	SEE PLAN	12 X 12	SEE PLAN	ALUMINUM	1,2,3
E	PRICE	620	12 X 8	SEE PLAN	12 X 8	SIDEWALL	ALUMINUM	1,2,4,6
F	PRICE	ACVD	12 X 8	SEE PLAN	12 X 8	CEILING	ALUMINUM	1,2,4,5

- PROVIDE SURFACE MOUNT FRAME FOR ALL GRILLES FOR INSTALLATION IN GYP CEILING.

A4/400/10"RND

SIZE THROW CFM NECK/FLEX CONNECTION SIZE

NOTES:
1. PROVIDE MANUAL VOLUME DAMPER AT MAIN TRUNK FOR BALANCING.
2. DIFFUSER FINISH SHALL BE OFF-WHITE.
3. PATTERN SHALL BE 45 DEGREE FIXED BLADE, ¾" SPACING.
4. PROVIDE PRE-FAB R-6 INSULATED GRILLE BOX WITH TAB COLLAR.
5. GRILLE FACE SHALL BE ADJUSTABLE CURVED BLADE. NO STAMPED GRILLES ACCEPTED.
6. GRILLE FACE SHALL BE DOUBLE DEFLECTION TYPE. NO STAMPED GRILLES ACCEPTED.

AIR HANDLER SCHEDULE

MARK	AHU-1
MANUFACTURER	CARRIER
MODEL NUMBER	FB4CNF003
TOTAL COOLING	24000
SENSIBLE COOLING	16240
SUPPLY CFM	800
OUTSIDE AIR CFM	-0-
EXTERNAL S.P. (IN W.G.)	.5"
FAN RPM.	---
MOTOR HORSEPOWER	1/2
FAN MOTOR F.L.A.	4.3
ENTERING AIR TEMPERATURE	78/67
LEAVING AIR TEMPERATURE	56.4/55.8
ELECTRIC HEAT KW / STEPS	5/1/208V.
FILTER TYPE	MERV 8
FILTER THICKNESS	1"
ELECTRICAL VOLTS / PHASE	208/230V. 1 PH.
WEIGHT	150
LOCATION	ABOVE CEILING
NOTES	1,2,3,6

CONDENSING UNIT SCHEDULE

MARK	CU-1
MANUFACTURER	CARRIER
MODEL NUMBER	25HCC524A0031
CAPACITY IN TONS	2.0
EER / SEER	15.0
COMPRESSOR(S) / RL.A.	1 - 12.8
CONDENSER FAN - NO. / HP. / F.L.A.	1 - 1/12 - 0.5
ELECRICAL VOLTS / PHASE	208/230V. 1 PH.
MIN. CIRCUIT AMPS.	16.5
MAX FUSE / M.O.C.P.	25
WEIGHT	142
LOCATION	WEST EQUIP. PAD
NOTES	1,2,4,5

- ALTERNATE EQUIVALENT MANUFACTURERS ACCEPTED.

NOTES:
1. HVAC CONTRACTOR COORDINATE ELECTRICAL DATA WITH ELECTRICAL CONTRACTOR PRIOR TO ORDER OF EQUIPMENT.
2. UNIT SHALL HAVE A SINGLE POINT ELECTRICAL CONNECTION.
3. PROVIDE TXV'S AND LOW AND HIGH PRESSURE SWITCHES.
4. PROVIDE LIQUID LINE FILTER-DRYERS.
5. PROVIDE FACTORY 7-DAY PROGRAMMABLE THERMOSTAT.
6. INSTALL FILTERS IN AIR HANDLER PRIOR TO START UP AND PROVIDE NEW SET OF FILTERS AT COMPLETION OF CONSTRUCTION.

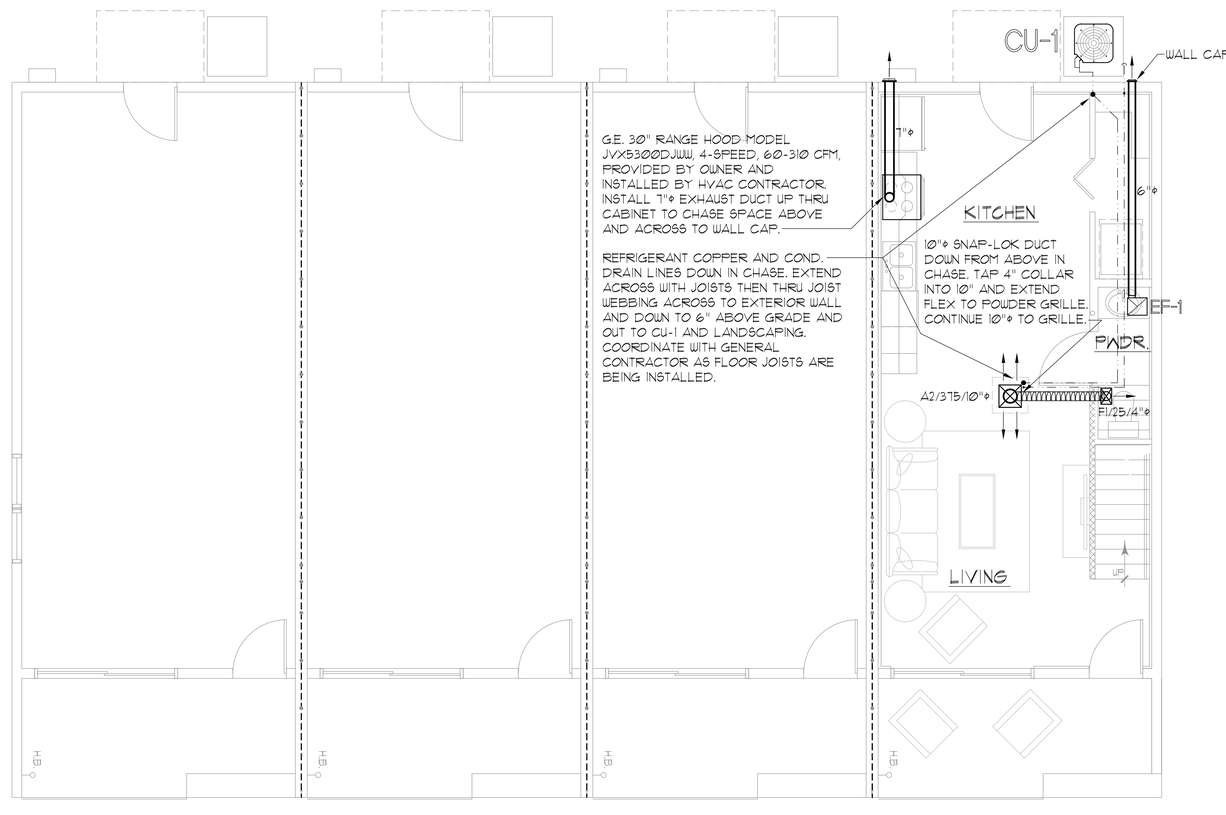

TYPICAL FIRST FLOOR MECHANICAL PLAN

SCALE: 1/4" = 1'-0"

N

MDCI FLORIDA, INC.
405 2nd Street South • Suite B
Safety Harbor, Florida 34695
Engineering Business No. 9204
Ph. 727.698.0398 Fax 727.797.8225

© Copyright, 2020 • Project No. 20008

△	revision	by
△		
△		
△		
△		
△		
△		

SIXTEENTH SQUARE - BUILDING I
ST. PETERSBURG, FL 33705

klar and klar
architects + interior designers
www.klarklar.com
28473 us 19 n
suite 602
clearwater, fl 33761
727-799-5420
American Institute of Architects member firm
☐ Roberta S. Klar
☒ Steven L. Klar

GARLAND PATTERSON, P.E.
FL. Lic. No.: 14175
12-14-20

☐ Preliminary
☒ Permitting Set
☒ Construction Set

Date: 12.14.2020

Drawn: T.A.F.

Sheet: M1

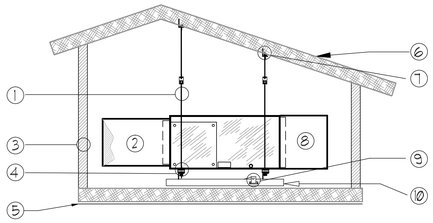

AIR HANDLER SUPPORT DETAIL

NOT TO SCALE FOR DIAGRAMATIC PURPOSES ONLY.

1. ¼" THREADED SUPPORT ROD WITH VECO MODEL IC VIBRATION ISOLATOR.
2. TYPE 800 SUPPLY DUCT WITH HEAT SHIELD.
3. ATTIC MECHANICAL ROOM, MIN. R-142 INSULATED. REFER TO ARCHITECTURAL DRAWINGS.
4. 1" CORK & NEOPRINE VIBRATION ISOLATOR.
5. CEILING SYSTEM.
6. ROOF SYSTEM WITH INSULATION.
7. 2" x 2" UNISTRUT BOLTED ACROSS JOISTS. EXTEND ¼" THREADED ROD THRU ANGLES WITH WASHERS AND LOCKING NUTS.
8. TYPE 800 1½" RETURN DUCT.
9. FLOAT SWITCH, SECURED TO PAN.
10. TWO INCH DEEP SECONDARY DRAIN PAN.

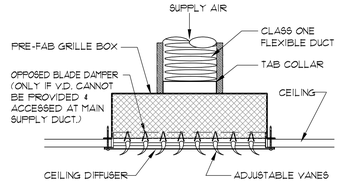

CEILING DIFFUSER DETAIL

N.T.S. FOR DIAGRAMATIC PURPOSES ONLY.

NOTES:
- TAPE INNER COIL OF FLEX TO THE DIFFUSER COLLAR. TAPE COMPLETELY AROUND TO ASSURE AN AIR TIGHT SEAL.
- PULL FLEX INSULATION AND OUTER COVER DOWN OVER GRILLE COLLAR AND SECURE TO GRILLE BOX WITH FOIL TAPE. DO NOT USE STRAP.
- STRETCH FLEX TIGHT BETWEEN DUCT AND DIFFUSER TO AVOID KINKS. SUPPORT EVERY FOUR FEET.

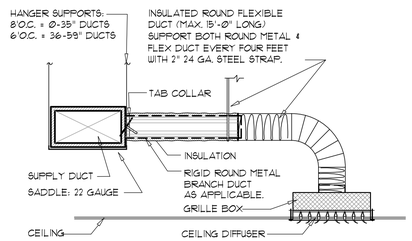

CEILING DIFFUSER RUNOUT DETAIL

NOT TO SCALE

- HANGER SUPPORTS SHALL BE AS NOTED ABOVE FOR DUCT WIDTHS UP TO 24".

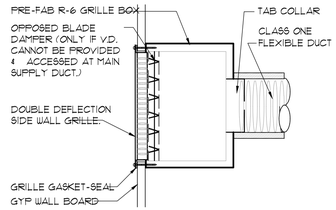

SIDEWALL GRILLE DETAIL

N.T.S. FOR DIAGRAMATIC PURPOSES ONLY.

NOTES:
- TAPE INNER COIL OF FLEX TO THE TAB COLLAR. TAPE COMPLETELY AROUND TO ASSURE AN AIR TIGHT SEAL.
- PULL FLEX INSULATION AND OUTER COVER OVER GRILLE BOX COLLAR AND SECURE TO GRILLE BOX WITH FOIL TAPE. DO NOT USE STRAP.
- STRETCH FLEX TIGHT BETWEEN DUCT AND GRILLE TO AVOID KINKS. SUPPORT EVERY FOUR FEET.

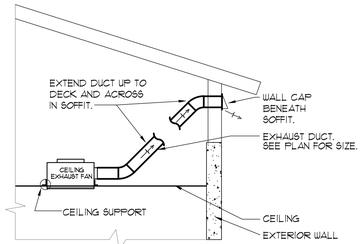

RESTROOM FAN DETAIL

NOT TO SCALE

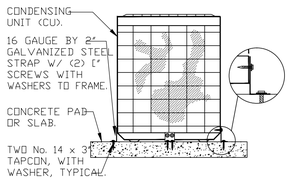

CONDENSER TIE-DOWN DETAIL

NOT TO SCALE

- DETAIL IS PROVIDED FOR FLORIDA 146 MPH WIND TIE-DOWN COMPLIANCE.

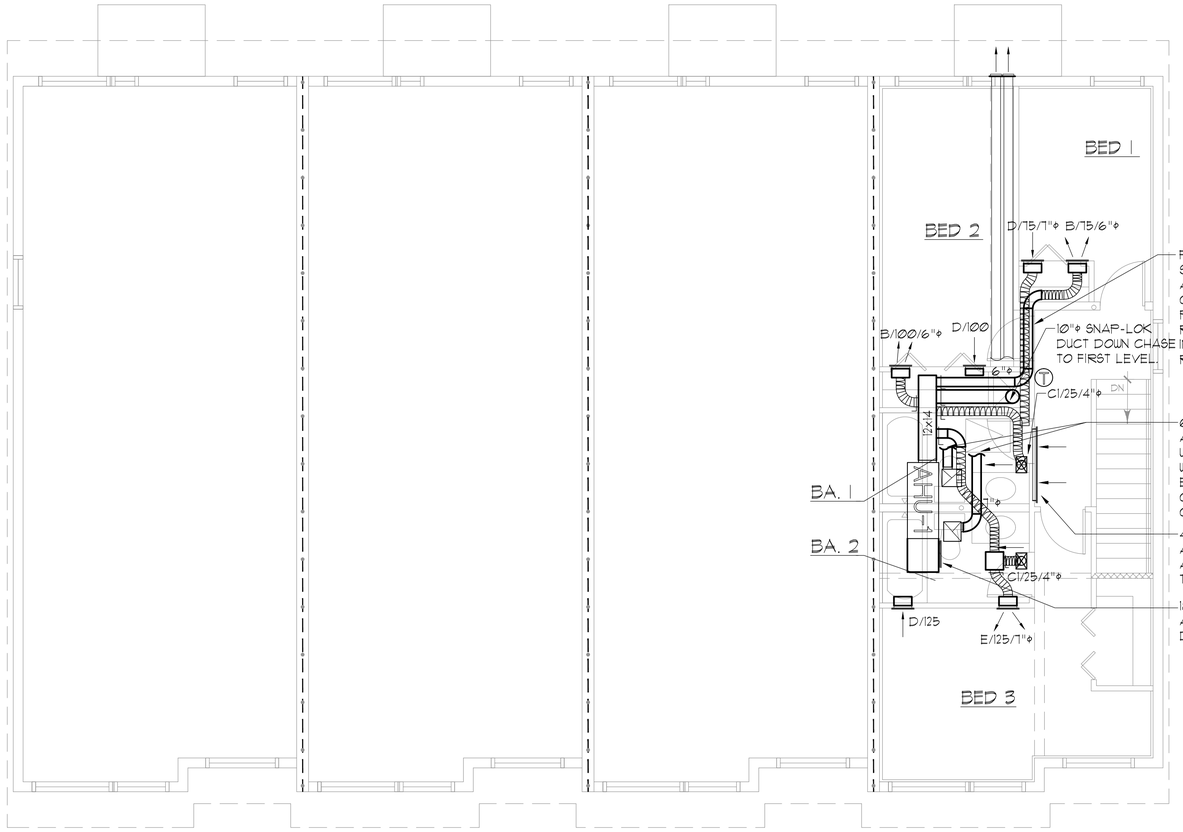

TYPICAL SECOND FLOOR MECHANICAL PLAN

SCALE: 1/4" = 1'-0"

N

MDCI FLORIDA, INC.
405 2nd Street South • Suite B
Safety Harbor, Florida 34695
Engineering Business No. 9204
Ph. 727.698.0398 Fax 727.797.8225

© Copyright, 2020 • Project No. 20008

revision	by

SIXTEENTH SQUARE - BUILDING I

ST. PETERSBURG, FL 33705

klar and klar
architects + interior designers
www.klarklar.com
28473 us 19 n
suite 602
clearwater, fl 33761
727-799-5420
American Institute of Architects member firm
☐ Roberta S. Klar
☒ Steven L. Klar

GARLAND PATTERSON, P.E.
FL Lic. No.: 14175
12-14-20

☐ Preliminary
☒ Permitting Set
☒ Construction Set

Date: 12.14.2020

Drawn: T.A.F.

Sheet: M2

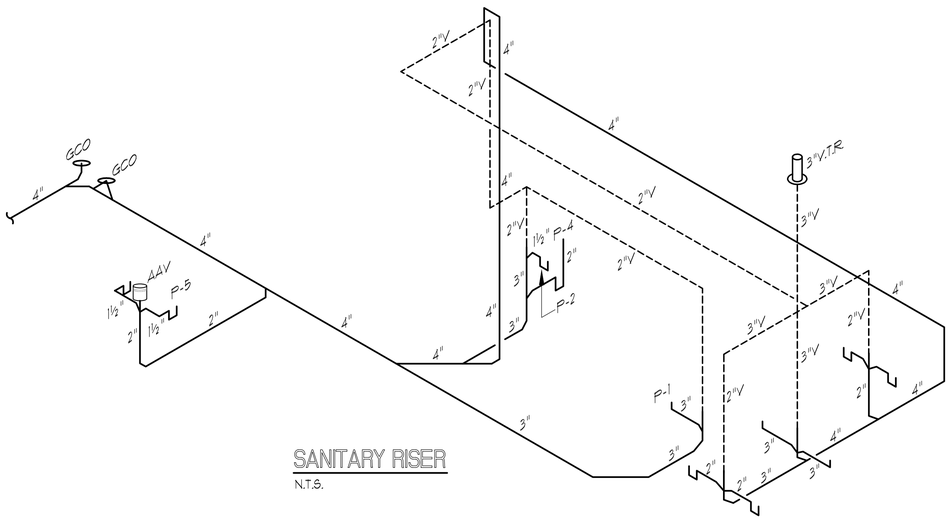

SANITARY RISER

N.T.S.

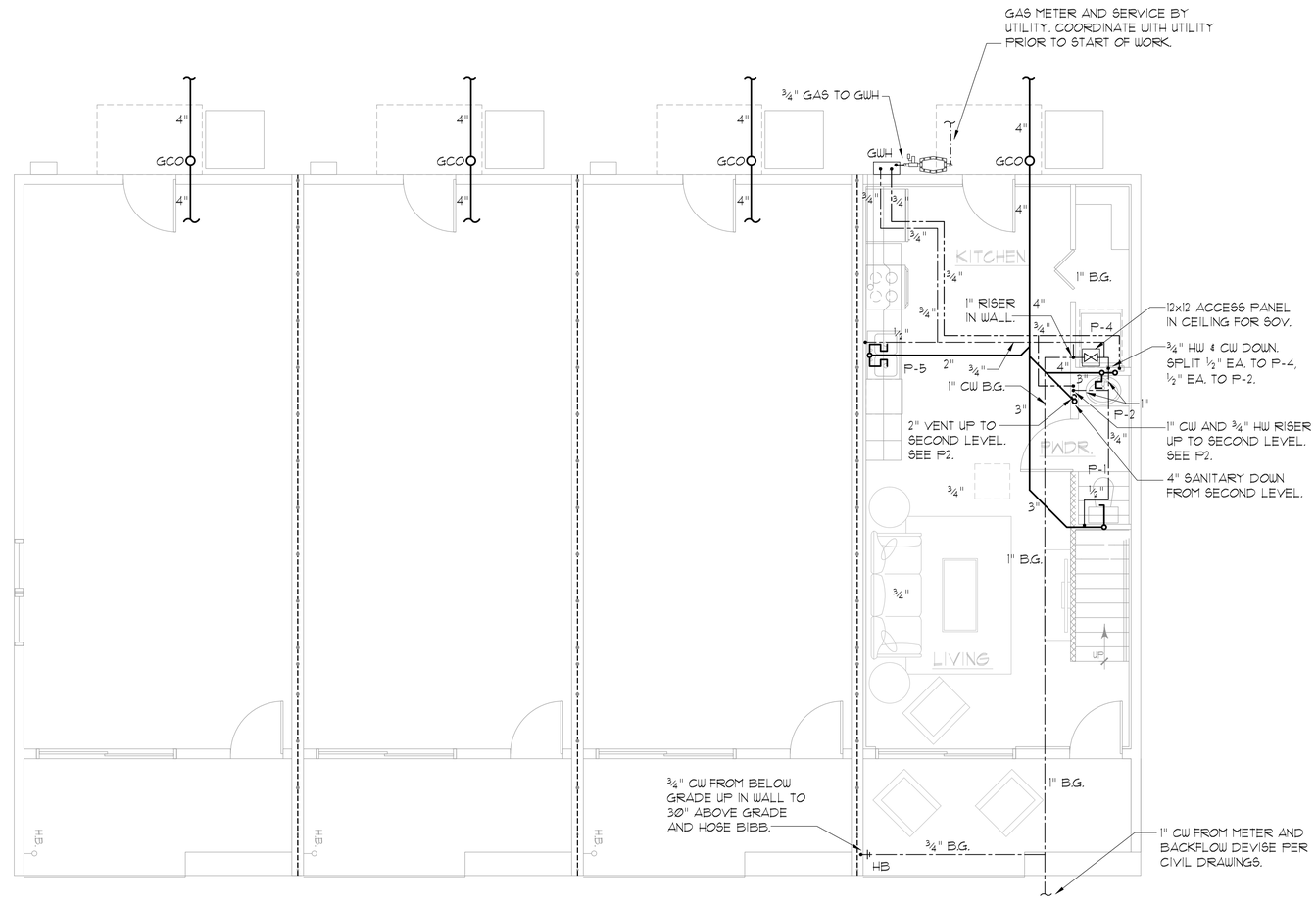

TYPICAL FIRST FLOOR PLUMBING PLAN

SCALE: 1/4" = 1'-0"

N

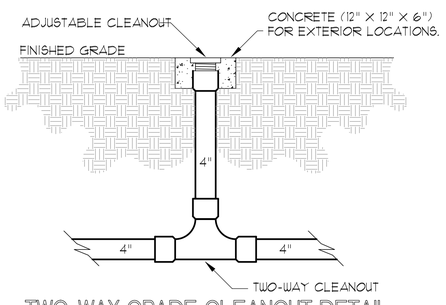

TWO-WAY GRADE CLEANOUT DETAIL

N.T.S.

- VERIFY SANITARY PIPE SIZE WITH PLANS AND PROVIDE CLEANOUT IN SAME SIZE.

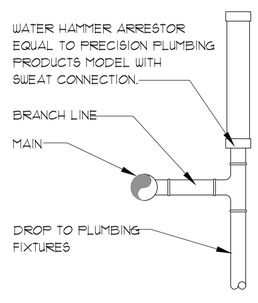

PPP SIZING CHART		
FIXTURE UNITS	SIZE (SWEAT)	PART NUMBER
1-11	½"	SWA-500
12-32	¾"	SWA-750
33-60	1"	SWA-1000
61-113	1¼"	SWA-1250
114-154	1½"	SWA-1500
155-330	2"	SWA-2000

WATER HAMMER ARRESTOR DETAIL

NOTES:
1. PROVIDE A WATER HAMMER ARRESTOR ON EACH HOT WATER AND COLD WATER DROP.
2. ARRESTORS SHOULD ALWAYS BE INSTALLED SO THAT THERE IS AN UNOBSTRUCTED SHOCK PATH TO THE ARRESTOR.
3. ARRESTORS SHOULD ALWAYS BE PLACED AS NEAR TO THE SOURCE OF SHOCK AS POSSIBLE.

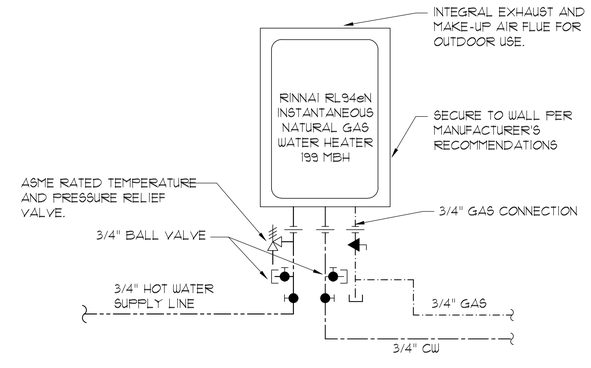

INSTANTANEOUS GAS WATER HEATER DETAIL

NOT TO SCALE.

WATER DEMAND SCHEDULE

FIXTURE	CW FIXTURE UNITS EACH	HW FIXTURE UNITS EACH	FIXTURE UNIT TOTAL EACH	QUANTITY EACH	FIXTURE UNIT TOTAL – ALL
WATER CLOSET – TANK	2.2	–0–	2.2	3	6.6
LAVATORY	0.5	0.5	0.7	3	2.1
SINK – DOUBLE COMPARTMENT	1.0	1.0	1.4	1	1.4
TUB/SHOWER	1.0	1.0	1.4	2	2.8
TOTAL FIXTURE UNITS					12.9
TOTAL GPM					16.4
REQUIRED WATER LINE SIZE:					1"

MDCI FLORIDA, INC.
405 2nd Street South • Suite B
Safety Harbor, Florida 34695
Engineering Business No. 9204
Ph. 727.698.0398 Fax 727.797.8225

© Copyright, 2020 • Project No. 20008

revision	by

SIXTEENTH SQUARE - BUILDING 1

ST. PETERSBURG, FL 33705

klar and klar
architects + interior designers
www.klarklar.com
28473 us 19 n
suite 602
clearwater, fl 33761
727-799-5420
American Institute of Architects member firm
☐ Roberta S. Klar
☒ Steven L. Klar

GARLAND PATTERSON LICENSE PE14175 12-14-20 STATE OF FLORIDA PROFESSIONAL ENGINEER

GARLAND PATTERSON, P.E.
FL Lic. No: 14175
12-14-20

☐ Preliminary
☒ Permitting Set
☒ Construction Set

Date: 12.14.2020

Drawn: T.A.F.

Sheet: P1

PLUMBING FIXTURE SCHEDULE

LABEL	FIXTURE	W	V	CW	HW	DESCRIPTIONS
P-1A	WATER CLOSET HANDICAPPED	3"	2"	½"	-	AMERICAN STANDARD 2T0AA.001 CADET 3 WHITE ELONGATED ADA 1.6 GALLON FLUSH TOILET. CHURCH 295CT OPEN FRONT WHITE SEAT, BRASSCRAFT KT SERIES ¼ TURN BALL STOP WITH VINYL SUPPLY.
P-2	COUNTER-TOP LAVATORY	1½"	2"	½"	½"	AMERICAN STANDARD AQUALYN #0476.028 20x17 COUNTERTOP LAVATORY, DELTA 523LF-HDF SINGLE LEVER FAUCET, CROME P-TRAP LESS CLEANOUT, BRASSCRAFT KT SERIES ¼ TURN STOPS, VINYL SUPPLIES.
P-3	BATHTUB & SHOWER VALVE	2"	2"	½"	½"	AMERICAN STANDARD "PRINCETON" 60"x30" TUB MODEL 2390.202/2391.202 WITH TILE FLANGE. PROVIDE MOEN RINZA #82638 POSI-TEMP TUB & SHOWER MIXING VALVE WITH DIVERTER AND ACCESSORIES. JAY R. SMITH 2010-A NICKEL BRONZE DRAIN.
P-4	CLOTHES WASHER BOX	2"	2"	¾"	¾"	CLOTHES WASHER BY OTHERS. FURNISH AND INSTALL A SYMMONS LAUNDRY MATE MODEL NO. W-602. MOUNT WITH HOSES, TRAP, ETC., TO MAKE A COMPLETE INSTALLATION.
P-5	SINK-DOUBLE COMPARTMENT	1½"	2"	½"	½"	ELKAY LR-3322 SINGLE HOLE DOUBLE COMPARTMENT SINK WITH MOEN "SLEEK" #7864 SINGLE HANDLE, HI-ARC PULL DOWN KITCHEN FAUCET. BRASSCRAFT KT SERIES ¼ TURN STOPS, VINYL SUPPLIES.
GWH	GAS WATER HEATER	-	-	1½"	1½"	RINNAAI MODEL RL94eN INSTANTANEOUS GAS WATER HEATER FOR OUTDOOR INSTALLATION. 199,000 BTUH, 120 VOLTS, ASHRAE/IES 90.1b - APPROVED.
HB	HOSE BIBB	-	-	¾"	-	JAY R. SMITH 5609 QT, NON-FREEZE WITH INTEGRAL VACUUM BREAKER. INSTALL AT 30" A.F.G.

GENERAL NOTES:

1. THE PLUMBING CONTRACTOR SHALL COORDINATE WITH THE CIVIL DRAWINGS AND SITE CONTRACTOR PRIOR TO START OF WORK. COORDINATE SANITARY INVERT(S) AND DOMESTIC WATER CONNECTION POINT AND SIZE.
2. WASTE AND VENT PIPING SHALL BE SCHEDULE 40 PVC WITH DRAINAGE PATTERN FITTINGS.
3. DOMESTIC WATER PIPING SHALL BE REHAU PEX-A WITH EVERLOC SYSTEM OR CPVC. PROVIDE WATER HAMMER ARRESTORS EQUAL TO JAY R. SMITH AT EACH FIXTURE GROUP, IN ACCORDANCE WITH THE 2017 FBC - PLUMBING, SIXTH EDITION.
4. SLOPE WASTE LINES 3" AND LARGER AT ⅛" PER FOOT. LINES SMALLER THAN 3" SHALL BE SLOPED AT ¼" PER FOOT.
5. INSULATE ALL DOMESTIC HOT WATER PIPING WITH 1" WALL ARMAFLEX OR EQUIVALENT INSULATION.
6. PROVIDE ISOLATION VALVES AT ALL FIXTURES. FIXTURES SHALL BE CHROME FINISH EQUAL TO BRASSCRAFT KT SERIES WITH VINYL SUPPLIES.
7. PROVIDE WALL CARRIERS OR BLOCKING AT ALL WALL-HUNG FIXTURES. CARRIERS SHALL BY FIXTURE MANUFACTURER OR EQUAL TO ZURN.CARRIER SHALL BE CAPABLE OF SUPPORTING A 350 LB. VERTICAL LOAD.
8. INSTALLATION OF ALL PLUMBING FIXTURES, PIPING, COMPONENTS AND PERIPHERALS SHALL COMPLY WITH THE 2017 FLORIDA BUILDING CODE - PLUMBING, SIXTH EDITION AND ALL OTHER APPLICABLE CODES, LAWS, STANDARDS AND ORDINANCES.
9. PLUMBING CONTRACTOR SHALL COORDINATE ALL VENTS THROUGH ROOF WITH ROOFING CONTRACTOR PRIOR TO COMMENCEMENT OF WORK.
10. ALTERNATE FIXTURE MANUFACTURERS ARE ACCEPTABLE PROVIDED THEY ARE EQUIVALENT AND MEET THE KIND AND QUALITY OF THE FIXTURES SPECIFIED.
11. PIPE HANGERS SHALL BE SPLIT RING TYPE, GALVANIZED, WITH THREADED ROD SUPPORT FROM STRUCTURE ABOVE EQUAL TO GRINNELL. DISTANCE BETWEEN SUPPORTS SHALL BE PER FBC - PLUMBING TABLE 308.5.
12. VENT PIPING SHALL BE EXTENDED TO EXISTING VENT SYSTEM WHICH CONTINUES UP THROUGH SECOND FLOOR AND TO 3" V.T.R. COORDINATE WITH EXISTING CONDITIONS PRIOR TO INSTALLATION.
13. TESTING OF THE PLUMBING SYSTEM SHALL BE PERFORMED BY THE PLUMBING SUBCONTRACTOR AND WITNESSED BY THE BUILDING DEPARTMENT INSPECTOR. POTABLE HOT AND COLD WATER SUPPLY PIPING SHALL BE HYDROSTATICALLY TESTED AT NOT LESS THAN 50 PSIG FOR 15 MINUTES. SOIL, WASTE AND VENT PIPING SHALL BE FILLED WITH WATER TO THE TOP OF THE SYSTEM WITH NO LESS THAN A 5-FOOT HEAD OF WATER FOR A PERIOD OF 15 MINUTES.
14. CLEANOUTS SHALL BE PROVIDED PER PLAN AND/OR AS REQUIRED TO PROVIDE A COMPLETE SERVICEABLE SYSTEM. CLEANOUTS SHALL BE SAME SIZE AS PIPE. FLOOR CLEANOUTS SHALL BE EQUAL TO ZURN Z-1400-KC WITH BRONZE TOP. WALL CLEANOUTS SHALL BE EQUAL TO ZURN Z-1411-KC WITH STAINLESS STEEL COVER.
15. INSULATE TRAY, TRAP AND APPLICABLE WATER PIPING BELOW ALL HANDICAPPED LAVATORIES WITH TRUEBRO "LAVGUARD" OR OTHER APPROVED SYSTEM.
16. WATER PIPING BELOW GRADE/SLAB SHALL BE TYPE 'K' COPPER IN VINYL SLEEVE, CPVC OR REHAU PEX-A.
17. PLANS AND DIAGRAMS/DETAILS ARE SCHEMATIC ONLY AND REPRESENT THE GENERAL INTENT OF WHAT IS TO BE INSTALLED AND SHOULD NOT BE SCALED. THE PLUMBING CONTRACTOR IS RESPONSIBLE FOR THE COORDINATION WITH ALL STRUCTURAL AND FIELD CONDITIONS AS WELL AS INSTALLATION HEIGHTS OF DUCTWORK, EQUIPMENT, CONDUIT, ETC. OF OTHER TRADES WHOSE SCOPE OVERLAYS THAT OF THE PLUMBING CONTRACTOR.
18. THE PLUMBING CONTRACTOR SHALL ANTICIPATE AND PROVIDE ALL INCIDENTAL AND PERIPHERAL ITEMS WHICH ARE OBVIOUSLY REQUIRED AND NECESSARY TO COMPLETE THE INSTALLATION REGARDLESS IF THESE ITEMS ARE SPECIFIED AND/OR SHOWN ON THE PLAN(S).
19. THERMOSTATIC MIXING VALVES SHALL BE PROVIDED AT ALL LAVATORIES AND HAND SINKS SET AT NO MORE THAN 100 DEGREES F. FOR CODE COMPLIANCE ON WATER TEMPERATURE CONTROL.

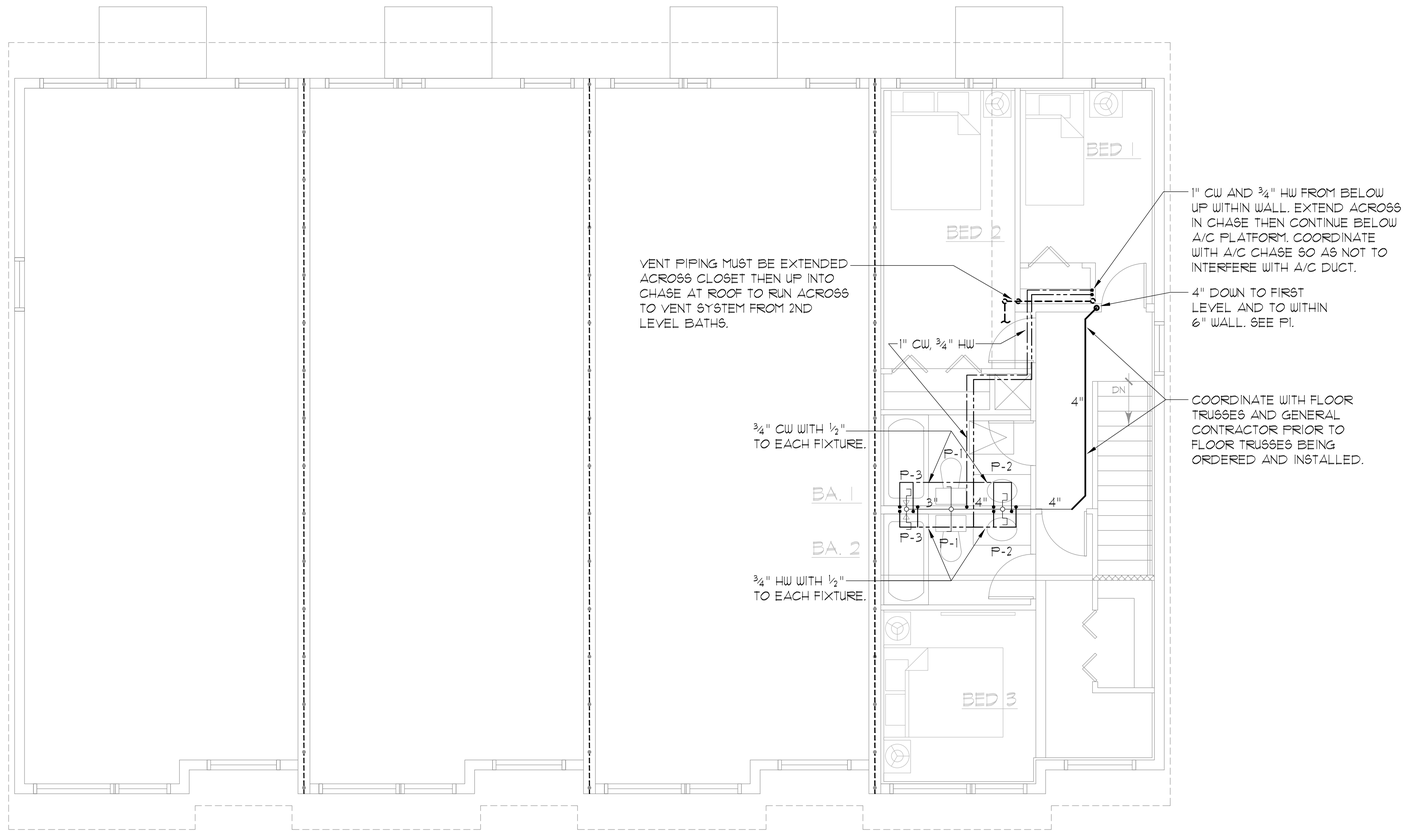

TYPICAL SECOND FLOOR PLUMBING PLAN

SCALE: 1/4" = 1'-0"

N

NOTE: THERE ARE SEVERAL AREAS WHERE WATER, SANITARY AND VENT PIPING EXTEND UP FROM THE FIRST LEVEL TO THE SECOND WHICH REQUIRE CRITICAL COORDINATION WITH THE FLOOR SYSTEM AND THE A/C DUCTWORK. THIS MUST BE DONE AS THE STRUCTURE IS BEING BUILT - NOT AFTERWARD. FAILURE TO PROPERLY COORDINATE WILL MAKE THE CONTRACTOR RESPONSIBLE FOR THE COST OF ANY CHANGES TO CORRECT INSTALLED WORK DUE TO LACK OF COORDINATION.

MDCI FLORIDA, INC.
405 2nd Street South • Suite B
Safety Harbor, Florida 34695
Engineering Business No. 9204
Ph. 727.698.0398 Fax 727.797.8225

© Copyright, 2020 • Project No. 20008

△	revision	by
△		
△		
△		
△		
△		
△		

SIXTEENTH SQUARE - BUILDING 1
ST. PETERSBURG, FL 33705

klar and klar
architects + interior designers
www.klarklar.com
28473 us 19 n
suite 602
clearwater, fl 33761
727-799-5420
American Institute of Architects member firm
☐ Roberta S. Klar
☒ Steven L. Klar

GARLAND PATTERSON
LICENSE
PE14175
12-14-20
STATE OF FLORIDA
PROFESSIONAL ENGINEER
GARLAND PATTERSON, P.E.
FL Lic. No.: 14175
12-14-20

☐ Preliminary
☒ Permitting Set
☒ Construction Set

Date: 12.14.2020

Drawn: T.A.F.

Sheet: P2

NAMASTÉ HOMES
"BUILDING A NEW WORLD"

April 11th, 2022

Dennis Weber, Real Estate Coordinator
City of St. Petersburg
Real Estate & Property Management
P.O. Box 2842
St. Petersburg, FL 33731-2842
(727) 893-7794
Email: dennis.weber@stpete.org

Dear Sir,

Subject: RE: Request for Additional Information - Proposal for 1805 18th Avenue South

Our response to your request for additional information is provided as follows:

What are the terms of the mortgages provided to the homebuyers?

- 30-year term amortizing
- Interest Rate 4% APR fixed

What will Namaste do to in SBE/MBE crease the level of SBE/MBE utilization?

- All our projects utilize SBE/MBE subcontractors, and most of these contracts are with companies in this category.
- We continue to look for additional SBE/MBE subcontractors.

Can they commit that they can move forward with the requested City $1,067,077 funding?

We will need to move forward with some of the design work, specifically that related to siteworks and investigate any additional requirements from the City with regard to capital improvements etc. and get firm costs from our suppliers and subcontractors before we enter into a formal contract with the City/CRA. We are proposing to construct these homes without any profit expectation within a high inflation environment and thus accurate costing is critical.

Describe how the opportunity zone investor will provide the remaining financing needs.

Our opportunity zone investment partner has the required funds available.

How would a requirement to sell only to households at 80% AMI effect the development proposal? How much additional public subsidy would be required?

As we stated in our proposal, we are flexible with respect to balancing the sale price and the amount of subsidy required. We can't literally sell at a specific % of AMI but rather a range that would be wide enough to attract the number of purchasers required. Referring to the table below, a purchase price on $200.000 would be affordable at 80% AMI and the City would need to increase the subsidy required buy $15,000 (the difference between a purchase price of $215,000 and $200,000)

NAMASTÉ HOMES
"BUILDING A NEW WORLD"

	Purchase Price	$ 200,000									
	AMI %	MAX AMI	Monthly Income	30% of MAX Household	RE Tax	Insurance	HOA	Mortgage actual Payment	Balance Available for Mortgage	Difference
Household Size 5 people	75%	$ 59,850	$ 4,988	$ 1,496	$ 257	$ 100	$ 100	$ 955	$ 1,039	$ 84
	80%	$ 76,608	$ 6,384	$ 1,915	$ 257	$ 100	$ 100	$ 955	$ 1,458	$ 503
	90%	$ 71,820	$ 5,985	$ 1,796	$ 257	$ 100	$ 100	$ 955	$ 1,339	$ 384
	100%	$ 79,800	$ 6,650	$ 1,995	$ 257	$ 100	$ 100	$ 955	$ 1,538	$ 583
	120%	$ 95,760	$ 7,980	$ 2,394	$ 257	$ 100	$ 100	$ 955	$ 1,937	$ 982
Household Size 4 people	75%	$ 55,344	$ 4,612	$ 1,384	$ 257	$ 100	$ 100	$ 955	$ 927	$ (28)
	80%	$ 70,840	$ 5,903	$ 1,771	$ 257	$ 100	$ 100	$ 955	$ 1,314	$ 359
	90%	$ 66,413	$ 5,534	$ 1,660	$ 257	$ 100	$ 100	$ 955	$ 1,203	$ 248
	100%	$ 73,792	$ 6,149	$ 1,845	$ 257	$ 100	$ 100	$ 955	$ 1,388	$ 433
	120%	$ 88,550	$ 7,379	$ 2,214	$ 257	$ 100	$ 100	$ 955	$ 1,757	$ 802
Household Size 3 people	75%	$ 49,875	$ 4,156	$ 1,247	$ 257	$ 100	$ 100	$ 955	$ 790	$ (165)
	80%	$ 63,840	$ 5,320	$ 1,596	$ 257	$ 100	$ 100	$ 955	$ 1,139	$ 184
	90%	$ 59,850	$ 4,988	$ 1,496	$ 257	$ 100	$ 100	$ 955	$ 1,039	$ 84
	100%	$ 66,500	$ 5,542	$ 1,663	$ 257	$ 100	$ 100	$ 955	$ 1,206	$ 251
	120%	$ 79,800	$ 6,650	$ 1,995	$ 257	$ 100	$ 100	$ 955	$ 1,538	$ 583

Will Namaste agree to a 30-year affordability period?

- YES

Are they requesting the same leasing alternative as they requested on their MLK Street site?

- No

Are any of the units designed to be wheelchair accessible?

The properties are designed to meet the City Visit-ability standards

Does Namaste have any experience doing seller financing? Please explain your experience with seller financing in addition to outreach to prospective homeowners.

No but we own a property management company that manages rent receipts and payments of insurance and real estate tax on a portfolio of properties. We will however outsource this activity to a 3rd party mortgage servicing company or utilize an appropriate software package to manage this activity.

Who is the lead on sales and managing this portion of the project?

Frederic Samson is a Licensed Real Estate Broker and sales, and marketing services will be provided by Namaste Realty LLC

How do you anticipate identifying eligible and interested prospective homeowners for this project? Is there an outreach strategy?

We have a partnership with NHS and anticipate receiving applications from their clients.
About direct outreach, we will target, teachers, Nurses, first responders and other City and county employees working in the CRA.

Could Namaste make any commitments to exclusively marketing the site to current residents within the South St. Petersburg CRA?

We cannot do this as it would be a violation of the Fair Housing Act.

How many years/how many payments will homeowners be making to Namaste?

The term is 30 years and payments are made monthly; 360 payments

Please explain what happens if someone defaults on payments under the seller-financing model proposed.
The process would be the same as any other home mortgage

How will the development costs be funded beyond the City's contribution?
Our opportunity zone investment partner will provide this funding.

The development cost is estimated at $3,242,879 and the City/CRA grant request combined with the workforce housing bonus is for $1,067, 079. There's also $189,200 listed as projected costs of sales.
This is the transaction cost required for a real estate conveyance and includes commission and sellers closing costs.

What is the plan for financing the upfront costs until costs are recuperated through sales over time?
Our opportunity zone investment partner will provide this funding.

Pinellas Park Artistry at Park Station project.

- Home purchases are using traditional mortgage lenders and mortgage originators to purchase homes in this development.
- Approximately 50% of the 27 homes have been sold:
  - Phase 1 6 units closed in 2021
  - Phase 2 5 units closing by the end of April 2022
  - Phase 3 8 units currently under construction
  - Phase 4 8 units in permitting
- We are currently in negotiations with the City/CRA to extend the development to include additional property in a 5th Phase of the project

- Namasté Homes has met every requirement of the development agreement with the City of Pinellas Park and the CRA. The project is proceeding within the project timeline agreed with the City We are currently in negotiations with the City/CRA to extend the development to include additional property into a 5th Phase of the project

- Attached please find photographs of the development for your reference.

The external renderings appear to be nearly the same as the project on M.L.K street. Would Namaste be open to slight design changes (e.g., color scheme; materials; etc.) to give the development a more unique sense of identity? How would this impact the cost of the project and the offer?
We are open to providing any design changes that the City may request. The cost impact will depend on the extent of the changes requested. At this point, repeating the basic design will result in a saving in design fees and an increased level of certainty in terms of construction cost based on our M.L.K. Street project currently under construction.

NAMASTÉ HOMES
"BUILDING A NEW WORLD"

Please elaborate on any sustainable and resilient design process and/or features.

Sustainability - Homes will be built using a lumber superstructure, a sustainable material, and with the following conservation and energy efficient elements:

- Insulated Impact Windows
- Thermal Insulation -SIPS
- Energy Efficient Air-conditioning
- Energy Efficient Appliances
- Natural Gas
- Tankless Water Heater
- Reflective Roof Material

Resilience -

- Insulated Impact Windows
- Two independent Energy Sources
- Hurricane Resistant Structure
- Flood Zone X
- On Site Stormwater Mitigation

Thank you for considering our proposal

Best
Glenn Larkan
Development Manager

Attachments:
Photographs of Namasté Home's Artistry at Park Station Development

3020 49th Street N., St. Petersburg, FL 33710
Ph: (727) 547-3610 Fax: (727) 399-6878
www.namastehomes.com

NAMASTÉ HOMES

"BUILDING A NEW WORLD"

ARTISTRY

AT PARK STATION

3020 49th Street N., St. Petersburg, FL 33710
Ph: (727) 547-3610 Fax: (727) 399-6878
www.namastehomes.com

NAMASTÉ HOMES

"BUILDING A NEW WORLD"

3020 49th Street N., St. Petersburg, FL 33710
Ph: (727) 547-3610 Fax: (727) 399-6878
www.namastehomes.com